GOVERNMENT OF TAMIL NADU
DEPARTMENT OF TECHNICAL EDUCATION
DIPLOMA IN ENGINEERING & TECHNOLOGY
REGULATION 2023

SEMESTER – I

##	Course Category	Course Type	Code	Course Title	L-T-P	Period	Credit	End Exam
1	Humanities & Social Science	Theory	TA231110	Tamil Marabu	2-0-0	30	2	Theory
2	Basic Science	Theory	MA231120	Basic Mathematics	3-1-0	60	4	Theory
3	Basic Science	Practicum	PH231330	Basic Physics	2-0-2	60	3	Theory
4	Basic Science	Practicum	CH231340	Basic Chemistry	2-0-2	60	3	Theory
5	Humanities & Social Science	Practicum	EN231350	Communicative English I	1-0-2	45	2	Practical
6	Engineering Science	Practicum	WP231360	Basic Workshop Practices	1-0-2	45	2	Practical
7	Engineering Science	Practical	DS231270	Digital Workplace Skills	0-0-4	60	2	Practical
8	Open Elective	Advanced Skill Certification	BE231280	Basic English for Employability	0-0-4	60	2	Practical
9	Humanities & Social Science	Integrated Learning Experience	-	Growth Lab	-	15	0	-
10	Audit Course	Integrated Learning Experience	-	Induction Program - I	-	40	0	-
11	Audit Course	Integrated Learning Experience	-	I&E/ Club Activity/ Community Initiatives	-	30	0	-
12	Audit Course	Integrated Learning Experience	-	Shop Floor Immersion	-	8	0	-
13	Audit Course	Integrated Learning Experience	-	Health & Wellness	-	30	0	-
14	Audit Course	Integrated Learning Experience	-	Student-Led Initiative	-	22	0	-
TOTAL						565	20	

Note: Test & Revisions: 60 Periods | Library Hours: 15 Periods

TA231110	தமிழர் மரபு	L	T	P	C
Theory	Tamil Marabu	2	0	0	2

Introduction

This course provides an opportunity for students who have Tamil as their mother tongue and for students from other states to have multifold outcomes. Learning in the mother tongue is a key factor for inclusion and quality learning, and it also improves learning outcomes and academic performance. This is crucial, for appreciation of Tamil as a language and as a culture. It fosters mutual understanding and respect for one another and helps preserve the wealth of cultural and traditional heritage that is embedded in Tamil language around the world.

Course Objectives

The objective of this course is to enable the student to

Appreciate Tamil art, culture and literature
Learn the history and culture of Tamil language
Relate to various art forms and their relevance to development
Acknowledge the rich heritage and significant achievements of the Tamilians
Appreciate the contribution of Tamilians to nation building

Course Outcomes

After successful completion of this course, the students should be able to

CO1: Understand the significance of Tamil as a classical language
CO2: Relate the art and culture in Tamil language
CO3: Explain the importance of music, dance and martial arts that were derived from Tamil Culture
CO4: Understand the poetic mode or theme of classical language
CO5: Relate the contribution of Tamils to Nation building

Pre-requisites

Nil

TA231110	தமிழர் மரபு	L	T	P	C
Theory	Tamil Marabu	2	0	0	2

CO/PO Mapping

CO / PO	PO1	PO2	PO3	PO4	PO5	PO6	PO7
CO1		3			2		2
CO2		3			2		2
CO3		3			2		2
CO4		3			2		2
CO5		3			2		2

Legend: 3-High Correlation, 2-Medium Correlation, 1-Low Correlation

Instructional Strategy

- It is advised that teachers take steps to pique pupils' attention and boost their curosity to learn.
- Apply story telling methods to pictures the realistic situations, and real-world examples to make the sessions engaging.
- Connecting to physical spaces, renowned scholars and researchers shall help students learn from the experts.
- Throughout the course, providing pre-reading and post-reading materials/videos may help sustain the interest through class discussions and debates.

Assessment Methodology

	Continuous Assessment (40 marks)				End Semester Examination (60 marks)
	CA1	CA2	CA3	CA4	
Mode	Written Test	Written Test	Assignment	Quiz/MCQ/ Activity/ Assignment	Written Examination
Duration	2 hours			1 Hour	3 hours
Exam Marks	30	30	30	10	100
Converted to	15	15	15	10	60
Marks	Best of CA1 & CA2 15 Marks		CA3 & CA4 25 marks		60

TA231110	தமிழர் மரபு	L	T	P	C
Theory	Tamil Marabu	2	0	0	2

அலகு I	**மொழி மற்றும் இலக்கியம்**	
இந்திய மொழிக் குடும்பங்கள் - திராவிட மொழிகள் - தமிழ் ஒரு செம்மொழி - தமிழ் செவ்விலக்கியங்கள் - சங்க இலக்கியத்தின் சமயச் சார்பற்ற தன்மை - சங்க இலக்கியத்தில் பகிர்தல் அறம் - திருக்குறளில் மேலாண்மைக் கருத்துக்கள் - தமிழ்க் காப்பியங்கள் - தமிழகத்தில் சமண பௌத்த சமயங்களின் தாக்கம் - பக்தி இலக்கியம் : ஆழ்வார்கள் மற்றும் நாயன்மார்கள் - சிற்றிலக்கியங்கள் - தமிழில் நவீன இலக்கியத்தின் வளர்ச்சி - தமிழ் இலக்கிய வளர்ச்சியில் பாரதியார் மற்றும் பாரதிதாசன் ஆகியோரின் பங்களிப்பு.		6
அலகு II	**மரபு - பாறை ஓவியங்கள் முதல் நவீன ஓவியங்கள் வரை - சிற்பக் கலை**	
நடுகல் முதல் நவீன சிற்பங்கள் வரை - ஐம்பொன் சிலைகள்- பழங்குடியினர் மற்றும் அவர்கள் தயாரிக்கும் கைவினைப் பொருட்கள், பொம்மைகள் - தேர் செய்யும் கலை - சுடுமண் சிற்பங்கள் - நாட்டுப்புறத் தெய்வங்கள் - குமரிமுனையில் திருவள்ளுவர் சிலை - இசைக் கருவிகள் - மிருதங்கம், பறை, வீணை, யாழ், நாதஸ்வரம் -தமிழர்களின் சமூக பொருளாதார வாழ்வில் கோவில்களின் பங்கு		6
அலகு III	**நாட்டுப்புறக் கலைகள் மற்றும் வீர விளையாட்டுகள்**	
தெருக்கூத்து, கரகாட்டம், வில்லுப்பாட்டு, கணியான் கூத்து, ஒயிலாட்டம், தோல்பாவைக் கூத்து, சிலம்பாட்டம், வளரி, புலியாட்டம், தமிழர்களின் விளையாட்டுகள்.		6
அலகு IV	**தமிழர்களின் திணைக் கோட்பாடுகள்**	
தமிழகத்தின் தாவரங்களும், விலங்குகளும் - தொல்காப்பியம் மற்றும் சங்க இலக்கியத்தில் அகம் மற்றும் புறக் கோட்பாடுகள் - தமிழர்கள் போற்றிய அறக்கோட்பாடு - சங்ககாலத்தில் தமிழகத்தில் எழுத்தறிவும், கல்வியும் - சங்ககால நகரங்களும் துறை முகங்களும் - சங்ககாலத்தில் ஏற்றுமதி மற்றும் இறக்குமதி - கடல் கடந்த நாடுகளில் சோழர்களின் வெற்றி		6
அலகு V	**இந்திய தேசிய இயக்கம் மற்றும் இந்திய பண்பாட்டிற்குத் தமிழர்களின் பங்களிப்பு**	
இந்திய விடுதலைப்போரில் தமிழர்களின் பங்கு - இந்தியாவின் பிறப்பகுதிகளில் தமிழ்ப் பண்பாட்டின் தாக்கம் - சுயமரியாதை இயக்கம் - இந்திய மருத்துவத்தில், சித்த மருத்துவத்தின் பங்கு- கல்வெட்டுகள், கையெழுத்துப்படிகள் - தமிழ்ப் புத்தகங்களின் அச்சு வரலாறு		6
TOTAL		30

TA231110	தமிழர் மரபு	L	T	P	C
Theory	Tamil Marabu	2	0	0	2

Unit I	LANGUAGE AND LITERATURE	
Language Families in India - Dravidian Languages – Tamil as a Classical Language - Classical Literature in Tamil – Secular Nature of Sangam Literature – Distributive Justice in Sangam Literature - Management Principles in Thirukural - Tamil Epics and Impact of Buddhism & Jainism in Tamil Land - Bakthi Literature Azhwars and Nayanmars - Forms of minor Poetry - Development of Modern literature in Tamil - Contribution of Bharathiyar and Bharathidhasan.		6
Unit II	HERITAGE - ROCK ART PAINTINGS TO MODERN ART – SCULPTURE	
Hero stone to modern sculpture - Bronze icons - Tribes and their handicrafts - Art of temple car making - Massive Terracotta sculptures, Village deities, Thiruvalluvar Statue at Kanyakumari, Making of musical instruments - Mridhangam, Parai, Veenai, Yazh and Nadhaswaram - Role of Temples in Social and Economic Life of Tamils		6
Unit III	FOLK AND MARTIAL ARTS	
Therukoothu, Karagattam, Villu Pattu, Kaniyan Koothu, Oyillattam, Leather puppetry, Silambattam, Valari, Tiger dance - Sports and Games of Tamils.		6
Unit IV	THINAI CONCEPT OF TAMILS	
Flora and Fauna of Tamils & Aham and Puram Concept from Tholkappiyam and Sangam Literature - Aram Concept of Tamils - Education and Literacy during Sangam Age - Ancient Cities and Ports of Sangam Age - Export and Import during Sangam Age - Overseas Conquest of Cholas.		6
Unit V	CONTRIBUTION OF TAMILS TO INDIAN NATIONAL MOVEMENT AND INDIAN CULTURE	
Language Families in India - Dravidian Languages – Tamil as a Classical Language - Classical Literature in Tamil – Secular Nature of Sangam Literature – Distributive Justice in Sangam Literature - Management Principles in Thirukural - Tamil Epics and Impact of Buddhism & Jainism in Tamil Land - Bakthi Literature Azhwars and Nayanmars - Forms of minor Poetry - Development of Modern literature in Tamil - Contribution of Bharathiyar and Bharathidhasan.		6
TOTAL HOURS		30

Suggested List of Students Activity

- A team activity to prepare a poster on any one module
- An elocution competition in the class for 3 minutes on any particular topic/any topic from the syllabi
- An essay writing on the topic of interest

TA231110	தமிழர் மரபு	L	T	P	C
Theory	Tamil Marabu	2	0	0	2

Text Books

- தமிழக வரலாறு – மக்களும் பண்பாடும் – கே.கே. பிள்ளை (வெளியீடு: தமிழ்நாடு பாடநூல் மற்றும் கல்வியியல் பணிகள் கழகம்).
- கணினித்தமிழ் – முனைவர் இல. சுந்தரம். (விகடன் பிரசுரம்).
- கீழடி – வைகை நதிக்கரையில் சங்ககால நகர நாகரிகம் (தொல்லியல் துறை வெளியீடு)
- பொருநை – ஆற்றங்கரை நாகரிகம். (தொல்லியல் துறை வெளியீடு)
- Social Life of Tamils (Dr.K.K.Pillay) A joint publication of TNTB & ESC and RMRL
- Social Life of the Tamils - The Classical Period (Dr.S.Singaravelu) (Published by: International Institute of Tamil Studies.
- Historical Heritage of the Tamils (Dr.S.V.Subatamanian, Dr.K.D. Thirunavukkarasu) (Published by: International Institute of Tamil Studies).
- The Contributions of the Tamils to Indian Culture (Dr.M.Valarmathi) (Published by: International Institute of Tamil Studies.)
- Keeladi - 'Sangam City Civilization on the banks of river Vaigai' (Jointly Published by: Department of Archaeology & Tamil Nadu Text Book and Educational Services Corporation, Tamil Nadu)
- Studies in the History of India with Special Reference to Tamil Nadu (Dr.K.K.Pillay) (Published by: The Author)

Reference

- Porunai Civilization (Jointly Published by: Department of Archaeology & Tamil Nadu Text Book and Educational Services Corporation, Tamil Nadu)
- Journey of Civilization Indus to Vaigai (R.Balakrishnan) (Published by: RMRL) – Reference Book.

MA231120	Basic Mathematics	L	T	P	C
Theory		3	1	0	4

Introduction

Mathematics develops analytical reasoning and critical thinking. It is an integral part of core engineering subjects. It helps to perform calculations and is used to create, test and analyze engineering models. The knowledge of Mathematics is compulsory for a better understanding of engineering and science subjects. This course is designed to give comprehensive coverage at an introductory level to Matrices, Determinants, Trigonometry, Vector Algebra, Statistical Measures and Probability.

Course Objectives

The objective of this course is to enable the students to

- acquire knowledge in basics of matrices and determinants.
- explain the trigonometric processes involved in engineering applications.
- define the essential elements to denote vectors in engineering applications.
- summarize the methods of collecting, analyzing, interpreting and presenting empirical data.
- explain the principal concepts about probability.

Course Outcomes

After successful completion of this course, the students should be able to

CO1: solve simultaneous linear equations using determinants and find the inverse of non-singular matrices.
CO2: compute the values of trigonometric ratios of compound angles and double angles.
CO3: solve problems involving the operations on vectors.
CO4: calculate the mean, variance and standard deviation of data distributions.
CO5: calculate the probability of simple and compound events.

Pre-requisites

High School Mathematics

MA231120	Basic Mathematics	L	T	P	C
Theory		3	1	0	4

CO/PO Mapping

CO / PO	PO1	PO2	PO3	PO4	PO5	PO6	PO7
CO1	3	3	2	2	1	2	3
CO2	3	3	2	2	1	1	3
CO3	3	3	2	2	1	1	3
CO4	3	3	2	2	1	2	3
CO5	3	3	2	2	1	1	3

Legend: 3-High Correlation, 2-Medium Correlation, 1-Low Correlation

Instructional Strategy

- It is advised that teachers take steps to pique pupils' attention and boost their learning confidence.
- To help students learn and appreciate numerous concepts and principles in each area, teachers should provide examples from daily life, realistic situations and real-world engineering and technological applications.
- The demonstration can make the subject exciting and foster in the students a scientific mindset. Student activities should be planned on all the topics.
- Throughout the course, a theory-demonstrate-practice-activity strategy may be used to ensure that learning is outcome-based and employability-based.
- All demonstrations/Hand-on practices are under a simulated environment (may be followed by a real environment as far as possible).

MA231120	Basic Mathematics	L	T	P	C
Theory		3	1	0	4

Assessment Methodology

	Continuous Assessment (40 marks)				End Semester Examination (60 marks)
	CA1	CA2	CA3	CA4	
Mode	Written Test	Written Test	Written Test	Quiz/MCQ/ Activity/ Assignment	Written Examination
Duration	2 hours				3 hours
Exam Marks	30	30	30	10	100
Converted to	15	15	15	10	60
Marks	Best Two of CA1, CA2 & CA3 (30 marks)			10	60

MA231120	Basic Mathematics	L	T	P	C
Theory		3	1	0	4

Unit I	MATRICES AND DETERMINANTS	
Matrices – Types of matrices – Equality, addition, subtraction, scalar multiplication and multiplication of matrices – Transpose of a matrix – Determinants – Values of second and third order determinants – Solution of simultaneous linear equations using Cramer's rule for 2 and 3 unknowns – Singular and non-singular matrices – Minor and cofactor – Cofactor matrix – Adjoint matrix – Inverse of a matrix – Simple problems – Engineering applications (not for examinations).		9+3
Unit II	TRIGONOMETRY	
Degree and Radian – Relation between degree and radian – Trigonometric ratios – Trigonometric ratios of standard angles – Graphs of $\sin x, \cos x, \tan x$ and e^x – Compound angle identities – $\sin(A \pm B), \cos(A \pm B)$ and $\tan(A \pm B)$ (without proof) – Double angle identities – $\sin 2A, \cos 2A$ and $\tan 2A$ (without proof) – Simple problems – Engineering applications (not for examinations).		9+3
Unit III	VECTOR ALGEBRA	
Definition, notation and rectangular resolution of a vector – Position vector – Addition and subtraction of vectors – Magnitude of a vector – Unit vector – Direction ratios – Direction cosines – Scalar product and vector product of two vectors – Projection – Angle between two vectors – Unit vector perpendicular to two vectors – Area of triangles and parallelograms using vector product – Simple problems – Engineering applications (not for examinations).		9+3
Unit IV	STATISTICS	
Statistical data – Ungrouped data – Grouped data – Discrete data – Continuous data – Arithmetic mean – Variance – Standard deviation – Fitting a straight line using the method of least squares – Simple problems – Engineering applications (not for examinations).		9+3
Unit V	PROBABILITY	
Random experiment – Outcomes – Sample space – Events – Occurrence of events – 'not', 'and' and 'or' events – Exhaustive events – Mutually exclusive events – Classical definition of probability – Axioms of probability – Probability of an event – Probability of 'not', 'and' and 'or' events – Conditional probability – Multiplication rule – Independent events – Simple problems (Combinatorial problems excluded) – Engineering applications (not for examinations).		9+3
TOTAL HOURS		60

Suggested List of Students Activities

Other than classroom learning, the following are the suggested student related co-curricular activities which can be undertaken to accelerate the attainment of the various outcomes in this course.

- Find the area of scalene-triangle shaped objects: Choose a scalene-triangle shaped plane object. Make a grid to cover the entire object by drawing one-unit equally spaced horizontal and vertical lines. Choose x-axis and y-axis on the grid and determine the coordinates of the vertices of the triangle. Let $A(x_1, y_1), B(x_2, y_2)$ and $C(x_3, y_3)$ be the vertices. Calculate the area of the object using the formula
$$\frac{1}{2}\begin{vmatrix} x_1 & y_1 & 1 \\ x_2 & y_2 & 1 \\ x_3 & y_3 & 1 \end{vmatrix}$$

- Find the height of a building: Choose a building in the college campus. Mark a point on the ground and measure the shortest distance from the point to the building. Let the distance be d metres. Measure the angle of elevation of the top of the building just above the foot of the perpendicular drawn from the point to the building using a clinometer. Let the angle of elevation be θ. Calculate the height of the building using the formula $h = d\tan\theta$. Compare the result with original height of the building. Use the same technique to calculate the size of the moon or distance of the moon (necessary inputs to be given).

- Predict the amount of electrical power a solar panel can produce: Using appropriate surveying apparatus, find the position-vector representation of the four corners of a solar panel fixed on a roof-top. Let the vectors arranged in counter clockwise direction be $\overrightarrow{OP_1} = x_1\vec{\imath} + y_1\vec{\jmath} + z_1\vec{k}, \overrightarrow{OP_2} = x_2\vec{\imath} + y_2\vec{\jmath} + z_2\vec{k}, \overrightarrow{OP_3} = x_3\vec{\imath} + y_3\vec{\jmath} + z_3\vec{k}$ and $\overrightarrow{OP_4} = x_4\vec{\imath} + y_4\vec{\jmath} + z_4\vec{k}$. Find the normal vector $\vec{N}$ to the surface $P_1P_2P_3P_4$ using the vector product formula $\vec{N} = \overrightarrow{P_1P_2} \times \overrightarrow{P_1P_4}$. Measure the direction of the sun and determine the unit vector representation of the direction of the sun as $\hat{a} = a_1\vec{\imath} + a_2\vec{\jmath} + a_3\vec{k}$. Let the intensity of the sunlight be $I\ Watts/m^2$. Give a vector representation to it by $\vec{F} = I\hat{a}$. The scalar product $\vec{F}.\vec{N}$ estimates the amount of energy absorbed and converted on the solar panel. Verify the results with actual electrical power generated by the solar panel.

- Why solar panels are usually tilted? Use the knowledge of trigonometry and vectors to reason and understand whether solar panels should be tilted or not.

- Fit a straight line for height-weight chart: Suppose there are 60 students in the class. Choose 5 students randomly to form group B and form group A with the remaining 55 students. Measure the height and weight of ith student in group A and denote them as x_i and y_i respectively. Create a bivariate data table consisting heights and weights of all the students in group A as follows.

Height X (in cm)	x_1	x_2	x_3	x_4	...	x_{54}	x_{55}
Weight Y (in Kg)	y_1	y_2	y_3	y_4	...	y_{54}	y_{55}

Fit a straight line of the form $y = mx + c$ using the method of least squares by taking height as independent variable and weight as dependent variable. Calculate the weights of the students in group B by inserting the heights in the formula $y = mx + c$ and compare them with their original weights.

- Monty Hall problem: For creating thought-provoking excitement in probability, students can be engaged in the famous Monty Hall problem. The problem is named after Monty Hall, a television game show host. A room is equipped with three doors. There is a car behind one of the doors, but there are goats behind the other two doors. The contestant can choose one door. The host will open one of the other two doors to reveal a goat. Then, the host will give two choices to the contestant. The contestant can stick to the original choice or switch to the other unopened door. If the contestant sticks to the original choice, the probability of winning the car is 1/3. If the contestant switches the selection to the other door, the probability of winning the car is 2/3.

References

- Higher Secondary First Year Mathematics Volume-I & Volume-II, Tamil Nadu Textbook and Educational Services Corporation, Government of Tamil Nadu, 2022.
- Higher Secondary Second Year Mathematics Volume-I & Volume-II, Tamil Nadu Textbook and Educational Services Corporation, Government of Tamil Nadu, 2022.
- John Bird, Higher Engineering Mathematics, Routledge, 9th Edition, 2021.
- Grewal, B.S., Higher Engineering Mathematics, Khanna Publishers, 42nd Edition, 2012.
- Deepak Singh, Mathematics-I, Khanna Book Publishing Co. (P) Ltd., 2021.
- Garima Singh, Mathematics-II, Khanna Book Publishing Co. (P) Ltd., 2021.

Web-based/Online Resources

https://www.khanacademy.org/math/
https://www.mathportal.org/
https://openstax.org/subjects/math
https://www.mathhelp.com/
https://www.geogebra.org/
https://www.desmos.com/
https://phet.colorado.edu/

PH231330	Basic Physics	L	T	P	C
Practicum		2	0	2	3

Introduction

Any technological innovation happens through a firm understanding of basic science. Knowing and developing proper understanding of the scientific principles behind every technological gadget or instrument is inevitable to a polytechnic student. This course systematically introduces the laws of physics which gives correct perspectives of dealing with technology and its societal uses.

Course Objectives

The objective of this course is to enable the student to

1. Outline the definitions of physical quantities, units, dimensions and error analysis
2. Explain the basics of vectors, forces and its vectorial properties
3. State Newton's laws and its application into day-to-day life and covers basics of periodic motion
4. Describe the elastic properties of any solid material
5. Explain the heat, work, modes of heat transfer, laws of thermodynamics

Course Outcomes

On successful completion of this course, the student will be able to

CO1: Apply the knowledge of measuring tools used in the Engineering fields
CO2: Demonstrate the applications of Lami's theorem and principle of moment into real world problems
CO3: Correlate the Newton's laws into to day-to-day applications and measure the value of g
CO4: Illustrate the elastic properties of material for engineering applications
CO5: Relate the heat and laws of thermodynamics in technological fields

Pre-requisites

High School Science

PH231330	Basic Physics	L	T	P	C
Practicum		2	0	2	3

CO/PO Mapping

CO / PO	PO1	PO2	PO3	PO4	PO5	PO6	PO7
CO1	3	3				1	1
CO2	3	3				1	1
CO3	3	3				1	1
CO4	3	3				1	1
CO5	3	3				1	1

Legend: 3-High Correlation, 2-Medium Correlation, 1-Low Correlation

Instructional Strategy

- It is advised that teachers take steps to pique pupils' attention and boost their learning confidence.
- To help students learn and appreciate numerous concepts and principles in each area, teachers should provide examples from daily life, realistic situations, and real-world engineering and technological applications. Try to give source examples from where the students would be familiar - like sports, or an activity that they usually engage in frequently.
- The demonstration can make the subject exciting and foster in the students a scientific mindset. Student activities should be planned on all the topics.
- Throughout the course, a theory-demonstrate-practice-activity strategy may be used to ensure that learning is outcome- and employability-based.
- All demonstrations/Hand-on practices are under a simulated environment (may be followed by a real environment as far as possible).
- Do not let students work on an activity or an experiment with the expected outcome, rather allow students to be honest about whatever the results of the experiment are. If the results are different from the expectations, students should do an analysis where could be the source of error, if any.

PH231330	Basic Physics	L	T	P	C
Practicum		2	0	2	3

Assessment Methodology

	Continuous Assessment (40 marks)				End Semester Examination (60 marks)
	CA1	CA2	CA3	CA4	
Mode	Written Test	Lab Assessment	Written Test	Lab Assessment	Written Examination
Duration	2 hours				3 hours
Exam Marks	30	20	30	20	100
Converted to	10	10	10	10	60
Marks	20		20		60

PH231330	Basic Physics	L	T	P	C
Practicum		2	0	2	3

Unit I	UNITS AND MEASUREMENTS	
Introduction – Science & Technology –Units and dimensions – definition – fundamental quantities – definition and their SI units, symbols – Derived physical quantities – Dimensional formula for length, mass and time, SI unit multiples and submultiples and prefixes of units. Measurements: Need & limitations of measuring instruments, least count, types of measurement, – screw gauge – Vernier calliper- Applications into industries. Errors in measurement (systematic and random), absolute error, relative error, error propagation (no derivation) –precautions to avoid systematic and random errors- Engineering applications. Physical quantities: velocity, momentum, acceleration, force, impulse, work, energy and power, Horsepower, watt, Calorie and Joule – Conversions.		7
Ex. 1 SCREW GAUGE: Using Screw Gauge: (i) Find the thickness and volume of given gauge wires (5,6,7,8,9) by measuring its length and diameter and error estimation (ii) Find the volume of the glass plate by measuring its thickness and area		4
Ex. 2 VERNIER CALIPER: Using Vernier Caliper: (i) Find the volume of a given hollow and solid cylinder by measuring its length and diameter (ii) Find the volume of a given rectangular block by measuring its length, breadth and thickness and error estimation		4
Unit II	**STATICS**	
Scalar and vector quantities: Definition and examples – Resolution of vector into two perpendicular components – Concurrent forces & coplanar forces: Examples – Resultant and Equilibrant force – Triangle and Parallelogram law for two forces: Statement only (no derivation), Examples – Lami's theorem – statement and explanation – Experimental verification of parallelogram of forces and Lami's theorem – Engineering applications - Moment of force, Couple – Principle of moment – Determination of mass of the given body		6
Ex. 3 VERIFICATION OF LAMI'S THEOREM: Verification of parallelogram and Lami's theorem for concurrent forces		4
Ex. 4 PRINCIPLE OF MOMENT: Using the principle of moment, determine the unknown mass of the given object		2
Unit III	**DYNAMICS**	
Newton laws, kinematic equations – Examples (horizontal, freely falling, vertically thrown) – Projectile motion (qualitative discussion) – Circular motion – angular velocity – period – frequency – relation between linear and angular velocity – centripetal and centrifugal force: application of centripetal and centrifugal forces (working of a centrifuge device) - Simple harmonic motion – amplitude – frequency – period – Simple pendulum – Acceleration due to gravity		6

PH231330	Basic Physics	L	T	P	C
Practicum		2	0	2	3

Ex. 5 SIMPLE PENDULUM: Determination of acceleration due to gravity using simple pendulum	4
Unit IV	**ELASTIC PROPERTIES OF SOLIDS**
Elastic and plastic bodies – stress–strain – definitions – Hooke's law – three types of strain – stress-strain curve - elastic and plastic limit – Three modulus of elasticity and its relations (no derivation)- Uniform and non-uniform bending of beams – Experimental determination of Y by uniform bending – Poisson ratio – Engineering applications of elasticity	5
Ex. 6 YOUNG'S MODULUS: Determination of young's modulus of a given object (one-meter wood scale) using pin and microscope	4
Ex. 7 HELICAL SPRING: Verification of Hooke's law and determination of Spring constant of helical spring	4
Unit V	**HEAT**
Concept of heat – temperature – centigrade, Fahrenheit and Kelvin scales – conduction, convection –radiation – Good and bad thermal conductors – Properties of thermal radiation – Heat conversion – Specific heat capacity – Laws of thermodynamics – different types of process – Examples – Ideal gas – Boyle's law.	6
Ex. 8 BOYLE'S LAW: Verification of Boyle's law using Quill Tube	4
TOTAL HOURS	**60**

Suggested List of Students Activity (Ungraded)

- Presentation/Seminars by students on any recent technological developments based on fundamental physics
- Periodic class quizzes conducted on a weekly/fortnightly basis to reinforce the basic physic concepts
- Micro project that shall be an extension of any practical lab exercise to real-world application
- Connecting sports to physics concepts:
    - Basketball or football with vectors - projectile motion (horizontal and vertical component). Intuitive understanding of the vectors. Students try out different angles of shooting the ball. For example, asking students through different combinations what angle of throw gives the farthest range, then later compare their answer with a mathematical equation.
- Factors affecting pendulum parameters - does length or mass affect the time period of the pendulum? Does the value of g depend on the setup of the pendulum?
- For STATICS unit - understanding forces involved in the game of human pyramid - can do a demonstration or an activity where cards or paper cups can be used for constructing a pyramid and understand how each cup is in equilibrium despite many forces acting on them.

PH231330	Basic Physics	L	T	P	C
Practicum		2	0	2	3

Reference

- XIth standard Tamilnadu State Board Physics Text Book, 2023 edition, Textbook Corporation Tamilnadu
- H.C.Verma, Concepts of Physics Vol 1 & Vol 2, Bharathi Bhavan Publishers, 1st edition, 2021

Web-based/Online Resources

https://www.youtube.com/@Ch22PhysicsIITPAL
https://www.youtube.com/playlist?list=PLyQSN7X0ro203puVhQsmCj9qhlFQ-As8e
https://youtube.com/playlist?list=PLFE3074A4CB751B2

CH231340	Basic Chemistry	L	T	P	C
Practicum		2	0	2	3

Introduction

Engineering is the application of the principles of basic science. The present syllabi of Basic Chemistry compiled for Diploma Engineering students restricts itself to certain limits, where it concentrates on basic concepts and useful applications viz. solution chemistry, surface chemistry, engineering polymeric materials like plastics, rubbers and electrochemistry, types of battery, preventions of corrosion. Enriching social awareness is an important component of education, hence, environmental chemistry aspects like air pollution, solid waste management and green chemistry are also included.

Course Objectives

The objective of this course is to enable the student to

1. Outline the importance of acids, base pH Indicators with industrial applications.
2. Illustrate the adsorption properties of colloidal particles, catalyst and their application.
3. Examine the engineering polymeric materials like rubber & plastics.
4. Explain about electrochemistry, electrochemical cells, batteries and to know about corrosion and prevention.
5. Appreciate the importance of Environmental Chemistry.

Course Outcomes

After successful completion of this course, the students should be able to

CO1: Enumerate the concentration, strength & pH of acids & base.
CO2: Demonstrate the catalytic & colloidal principles & properties
CO3: Elucidate the composite & usage of plastics and polymer products
CO4: Articulate the principles in electroplating, batteries and corrosion.
CO5: Interpret the effect of environmental hazards and the need of Green Chemistry.

Pre-requisites

High School Science

CH231340	Basic Chemistry	L	T	P	C
Practicum		2	0	2	3

CO/PO Mapping

CO / PO	PO1	PO2	PO3	PO4	PO5	PO6	PO7
CO1	3	3	2		2	1	1
CO2	3	3	2		2	1	1
CO3	3	3	2		2	1	1
CO4	3	3	3		2	1	1
CO5	3	3	3		2	1	1

Legend: 3-High Correlation, 2-Medium Correlation, 1-Low Correlation

Instructional Strategy

- It is advised that teachers take steps to pique pupils' attention and boost their learning confidence.
- To help students learn and appreciate numerous concepts and principles in each area, teachers should provide examples from daily life, realistic situations, and real-world engineering and technological applications.
- The demonstration can make the subject exciting and foster in the students a scientific mindset. Student activities should be planned on all the topics.
- Throughout the course, a theory-demonstrate-practice-activity strategy may be used to ensure that learning is outcome- and employability-based.
- All demonstrations/Hand-on practices are under a simulated environment (may be followed by a real environment as far as possible).

Assessment Methodology

	Continuous Assessment (40 marks)				End Semester Examination (60 marks)
	CA1	CA2	CA3	CA4	
Mode	Written Test	Lab Assessment	Written Test	Lab Assessment	Written Examination
Duration	2 hours				3 hours
Exam Marks	30	20	30	20	100
Converted to	10	10	10	10	60
Marks	20		20		60

CH231340	Basic Chemistry	L	T	P	C
Practicum		2	0	2	3

Unit I	SOLUTION CHEMISTRY	
Solution –Solute, Solvent - dilute and concentrated solution – methods of expressing the concentration of the solution – molality – molarity – normality(simple numerical problems only). Properties of acids and bases -Lewis concept of acids and bases –advantages - pH and pOH – Definition – Indicator – Definition – Buffer solution – Definition – Types of buffer solution with examples – Application of pH in industries.		6
Ex 1. Estimation of sulphuric acid Ex 2. Estimation of strong acid by pH metry		6
Unit II	**SURFACE CHEMISTRY**	
Colloids – Definition – True solution and Colloidal solution – Differences – lyophilic colloids and lyophobic colloids (definitions only) – Properties - Tyndall effect – Brownian movement – Industrial applications of colloids. Smoke Precipitation by Cottrell's method, Purification of water, Catalyst – Definition – Positive – Negative catalyst – Definition – Types of catalysis – Homogeneous and Heterogeneous catalysis examples– Characteristics of a catalyst – Industrial applications of catalysts.		6
Ex 3. Preparation of lyophilic colloids and lyophobic colloids		6
Unit III	**POLYMER CHEMSITRY**	
Plastics – types – Types of Polymerization-Addition and condensation polymerization Thermoplastics and Thermoset plastics – Differences – Mechanical properties of plastics – Advantages of plastics over traditional materials-Natural polymer – Rubber – Extraction of rubber from latex - defects of natural rubber – Vulcanization – Compounding of rubber –Ingredients and their functions.		6
Ex 4. Preparation of thermosetting resin-Urea-formaldehyde resins		6
Unit IV	**ELECTRO CHEMISTRY**	
Electronic concept of oxidation and reduction– electrolytes -classification-strong, weak and non-electrolyte – examples – electrolysis – definition – Mechanism – Industrial applications of Electrolysis - Chrome plating - Primary Battery – Secondary Battery – Definition, examples & construction of Li-ion Battery. Corrosion (Definition)– Differential aeration theory only – Factors Influencing Rate of Corrosion. – Methods of Prevention of Corrosion (qualitative).		6
Ex. 5. Estimation of Mohr's salt by permanganometry Ex. 6. Comparison of strength of two $KMnO_4$ solutions		6

CH231340	Basic Chemistry	L	T	P	C
Practicum		2	0	2	3

Unit V	ENVIRONMENTAL CHEMISTRY	
	Air pollution – Definition – Air pollutants (SO2, H2S, HF, CO and Dust) – Sources and Harmful effects – Formation of Acid Rain – Harmful effects – Green House Effect – Causes – Ozone layer depletion and its harmful effects- Global warming – Harmful effects – Control of Air Pollution. Solid Waste – Definition – Problems – Types of Solid waste methods of Disposal – Land fill and Incineration – Recycling – Definition – Examples – Advantages of Recycling (Basic ideas) Green Chemistry Definition – Goals of Green Chemistry.	6
	Ex 7. Crystallization of copper sulphate and identification of ions Ex 8. Decolorization of clayey water using sand bed.	6
	TOTAL HOURS	60

Suggested List of Students Activity

- Mini Projects like working model of experiments like chrome plating, tinning and sand bed
- Better understanding through work sheets / Quiz/Oral Testing
- Crossword puzzles and poster making

Reference

- Textbook on Chemistry for XI standard (TN State Board)
- Textbook on Chemistry for XII standard (TN State Board)
- Essentials of Physical Chemistry, Bahl & Tuli, 28th edition, S.Chand Publishing House.
- A textbook of Engineering Chemistry, Dr.Sunita Rattan, 2020 reprint, S.K.Kataria&Sons
- Textbook of Physical Chemistry, P.L Soni,O.P.Dharmarha & U.N.Dash,2022 edition, S.Chand Publishing House.

Web-based / Online Resources

https://libguides.lib.msu.edu/chemistry/teachonline
https://www.khanacademy.org/science/chemistry
https://phet.colorado.edu/
https://www.sciencebysimulation.com/chemreax/Faq.aspx

EN231350	Communicative English I	L	T	P	C
Practicum		1	0	2	2

Introduction

Language is a means of self-expression and one of the prime tools of communication. Communicative fluency augments one's personal, academic, social and professional life. The present syllabus focuses on four Communication Skills, viz. Listening, Speaking, Reading and Writing and enables the students at the Diploma level to gain confidence and fluency in communication which in turn would enhance them to face their career commitments with globalized standards.

Course Objectives

The objective of this course is to enable the student to

1. Use English confidently for practical purposes across the curriculum.
2. Express ideas in clear and grammatically correct usage
3. Plan, organize and present ideas coherently using cohesive devices.
4. Analyze, interpret, infer and evaluate ideas and respond appropriately.
5. Enable learners to communicate effectively and appropriately in real-life situations.

Course Outcomes

After successful completion of this course, the students should be able to

CO 1: Apply spoken English in various contexts, including conversations, lectures, and audio recordings.
CO 2: Demonstrate fluently and accurately in spoken English, using appropriate vocabulary & grammar, and engage in conversations, discussions, and presentations.
CO 3: Communicate effectively in English, demonstrating coherence, organization, and clarity in their spoken / written communication.
CO 4: Develop critical thinking skills by analyzing and evaluating the information presented in English, expressing opinions, and supporting arguments in a logical and coherent manner.
CO 5: Practice the language learning process, identify areas for improvement, and seek opportunities for further language development outside the classroom.

EN231350	Communicative English I	L	T	P	C
Practicum		1	0	2	2

CO/PO Mapping

CO / PO	PO1	PO2	PO3	PO4	PO5	PO6	PO7
CO1						3	2
CO2						3	2
CO3						3	2
CO4						3	2
CO5						3	2

Legend: 3-High Correlation, 2-Medium Correlation, 1-Low Correlation

Instructional Strategy

The instructional strategy for Communicative English classes employs a learner-centred and communicative approach that focuses on active student participation and engagement. Here are some key strategies to be followed:

- Communicative Activities: Design and facilitate activities that encourage students to actively use the language in meaningful and authentic contexts. This can include role plays, language games, discussions, debates, group projects, and problem-solving tasks.
- Pair and Group Work: Incorporate pair and group work opportunities to promote student interaction and collaboration. This allows them to practice and reinforce their language skills through communication with their peers.
- Authentic Materials: Utilize authentic materials such as news articles, videos, podcasts, and real-life texts to expose students to genuine language use and cultural contexts. This helps develop their comprehension and critical thinking skills while expanding their vocabulary and cultural awareness.
- Task-Based Learning: Implement task-based learning activities where students work on specific tasks or projects that require them to use English for a real-world purpose. This approach fosters language acquisition through meaningful communication and problem-solving.
- Language Input and Output Balance: Ensure a balance between language input (exposure to new vocabulary, grammar structures, and examples) and language output (opportunities for students to produce language). This balance allows students to build both receptive (Listening & Reading) and productive language skills (Speaking & Writing)

- Use of Technology: Incorporate technology tools and resources, such as language learning apps, online platforms, interactive multimedia, and virtual communication tools, to enhance engagement and provide additional language practice opportunities.
- Multimodal Approaches: Engage students through a variety of modalities, including listening, speaking, reading, and writing, as well as incorporating visual aids, gestures, and real-life examples. This caters to different learning styles and reinforces language learning through multiple channels.
- Regular Assessment and Reflection: Incorporate formative and summative assessments to gauge student progress and provide targeted feedback. Encourage students to reflect on their language learning journey, set goals, and actively monitor their own progress.

Assessment Methodology

	Continuous Assessment (40 marks)				End Semester Examination (60 marks)	
	CA1	CA2	CA3	CA4		
Mode	Written Test	Written Test	Lab Test	Quiz/MCQ/ Activity/ Assignment	Written Exam	Practical Exam
Duration	2 hours			1 Hour	1½ hours	1½ hours
Exam Marks	30	30	30	10	50	50
Converted to	15	15	15	10	60	
Marks	Best of CA1 & CA2 15 marks		15	10	60	

EN231350	Communicative English I	L	T	P	C
Practicum		1	0	2	2

Unit I	EXPRESSIVE ENGLISH	
THEORY: 'Night of the Scorpion' by Nizim Ezekiel FOCUS ON: Differentiating Open Class Words - (Noun, Verb, Adjective, Adverb) (Based on the poem)		3
PRACTICAL: (Lab / Activity) LISTENING: Simple and short poems on NATURE (Selected poems will be given) Identification: Nouns, Adjectives, Rhyming Words Ex. 1 Listening to poems on NATURE and Identifying Nouns, Adjectives and Rhyming Words A Short poem on Nature of 8 – 10 to be given. Students will be asked to listen to the audio played / poem read and identifies the nouns, adjectives and rhyming words used in the poem. Listening practice is to be given. (To Be Recorded in the Record Note Book) SPEAKING: Word Game (Essential words to be given) (Nouns, Verbs, Adjectives, Adverbs) Oral practice is to be given. READING: Tongue Twisters (Selected 20 sentences will be given) Oral practice is to be given. WRITING: Academic Letters (Model Letters to be given) Written practice is to be given.		6

Unit II	CREATIVE ENGLISH	
THEORY: 'The River' by A.K.Ramanujam FOCUS ON: Usage of Main Verb / Auxiliary Verb/ Modal Verb and Tenses		3
PRACTICAL: (Lab / Activity) LISTENING: General simple/short poems on MOTIVATION / SOFT SKILLS (Selected poems will be given). Fill ups: a) Information Gaps, b) Main Verbs/Modal Verbs. Listening practice is to be given. SPEAKING: Useful Expressions (Greetings, Requesting. Asking / Eliciting information, Offering Suggestions / Opinions) Ex. 2 Speaking - Useful Expressions - Students will be asked to give suitable expressions according to the context given. Speaking practice is given (To Be Recorded in the Record Note Book) READING: Comic Strips, Small Conversations. Oral practice is to be given.		6

EN231350	Communicative English I	L	T	P	C
Practicum		1	0	2	2

WRITING: Sentence Making using Substitution Table (Based on Tenses) Writing practice is given.	
Unit III	**EFFECTIVE ENGLISH**
THEORY: PROSE COMBINED WITH LSRW SKILLS FOCUS ON: Linkers & Connectives	3
PRACTICAL: (Lab / Activity) LISTENING: Short Story on Moral Value (Identifying Linkers). Listening practice is to be given. SPEAKING: Just a Minute Talk (JAM) (Selected Topics can be given). Speaking practice is to be given READING: General Paragraph on Moral Values (Selected passages given) Ex. 3 Reading General Paragraph on Moral Values. Students will be asked to read the given passage on Moral Values with proper Stress and Intonation. Reading practice is to be given. (To Be Recorded in the Record Note Book) WRITING: Note Taking/Summarization (Based on the General Paragraph given). Written practice is to be given.	6
Unit IV	**SITUATIONAL ENGLISH**
THEORY: PROSE COMBINED WITH LSRW SKILLS FOCUS ON: Spotting the Errors in the given sentences	3
PRACTICAL: (Lab / Activity) LISTENING: General Conversations. Framing Sentences (Based on the words used in the conversation). Listening practice is to be given. SPEAKING: Introducing Oneself / Others. Ex. Speaking - Introducing Oneself / Others. Students will be asked to Introduce himself/herself and their family members/friends. Speaking practice is to be given. (To Be Recorded in the Record Note Book) READING: Reading General Paragraphs and identifying main points (Skimmimg). Reading practice is to be given. WRITING: General Paragraph Writing (5 lines) (Hints to be given). Writing practice is to be given.	6

EN231350	Communicative English I	L	T	P	C
Practicum		1	0	2	2

Unit V	FUNCTIONAL ENGLISH	
THEORY: PROSE COMBINED WITH LSRW SKILLS FOCUS ON: Passive Voice		3
PRACTICAL: (Lab / Activity) LISTENING: General passages related to technology (Comprehension Questions). Listening practice is to be given. SPEAKING: Product description (Model exercises based on their respective branches to be given). Speaking practice is to be given. READING: Reading technical passages and identifying specific points (Scanning) (Model passages for reading are given). Reading practice is to be given. WRITING: Paragraph Writing (6 - 8 lines) Writing with a suitable Topic Sentence, Explanatory Sentences, Examples and using Link words (TEEL Model) Ex. 5 Writing paragraph using TEEL model. Students will be asked to write a paragraph using the TEEL model of giving the Topic Sentence, Explanatory Sentences, Examples and using Link words. Writing practice is to be given. (To Be Recorded in the Record Note Book)		6
TOTAL HOURS		45

Suggested List of Students Activity

- Role Plays: Assign students different roles or scenarios and have them engage in conversations or situations to practice speaking and listening skills.
- Information Gap Activities: Create activities where students need to exchange information with each other to complete a task or solve a problem. This encourages communication and collaboration.
- Descriptive Presentations: Ask students to give presentations about a specific topic, describing it in detail and using appropriate vocabulary and language structures.
- Language Games: Incorporate language learning games like word puzzles, vocabulary quizzes, charades, or language board games to make learning enjoyable and interactive.
- Problem-Solving Tasks: Provide real-life or hypothetical problems that students must solve through discussion and collaboration. This encourages critical thinking and effective communication.
- News Discussions: Bring in current news articles or videos for students to discuss and express their opinions on various topics.
- Collaborative Writing: Assign group writing tasks where students collaborate to create a story, report, or presentation. This promotes teamwork and helps improve writing skills.

- Simulations: Create simulated scenarios or real-life situations where students must use English to navigate and interact, such as ordering food in a restaurant or booking a hotel room.

Text Books

- "Cambridge English Skills: Real Listening and Speaking" by Miles Craven
- "Writing Better English for ESL Learners" by Ed Swick
- "English Grammar in Use" by Raymond Murphy

Reference

- "Practical English Usage" by Michael Swan
- "Oxford Basics – Simple Reading Activities" by Jill Hadfield, Charles Hadfield
- "Oxford Basics – Simple Speaking Activities" by Jill Hadfield, Charles Hadfield

Web-based / Online Resources

https://www.bbc.co.uk/learningenglish/
https://www.fluentu.com/
https://www.englishclub.com/

WP231360	Basic Workshop Practices	L	T	P	C
Practicum		1	0	2	2

Introduction

Basic Workshop Practices help to develop the technical hands-on skills required by the technicians working in various Engineering sectors. This course intends to impart the basics of hand tools and their uses in different sections of manufacturing. The topics covered are based on the syllabus for diploma studies in Engineering. The course is planned to include basic practical experience in Fitting, Wiring and Plumbing. The courses are arranged in sequence, that starts from the basic concepts on safety rules followed in Industries, Dimensioning system, Basic Measuring instruments & basic tools used for Manufacturing processes. In this course, it is expected that the students would be able to get workshop experience, which helps to build an understanding of the complexity of the industrial job and the skills requirement of the jobs.

Course Objectives

The objective of this course is to enable the student to

1. Understand the importance of safety & Precautions in Industries.
2. Understand and practice the 5S system in Industries.
3. Identify suitable marking and measuring tools for materials.
4. Read the drawing and understand the dimensioning system.
5. Practical skills on Fitting, Plumbing & Wiring trades.

Course Outcomes

After successful completion of this course, the students should be able to

CO1: Illustrate the safety aspects and 5s system in Industry.
CO2: Identify & select the appropriate tools required for specific operations.
CO3: Prepare the jobs according to the drawing for Fitting, Plumbing and Wiring.
CO4: Produce jobs as per specified dimensions and inspect the job for quality
CO5: Demonstrate the Fitting, Wiring and plumbing practices for house wiring practice, install and test a battery with hydrometer.

Pre-requisites

Nil

WP231360	Basic Workshop Practices	L	T	P	C
Practicum		1	0	2	2

CO/PO Mapping

CO / PO	PO1	PO2	PO3	PO4	PO5	PO6	PO7
CO1	3	1	2	3	2		1
CO2	3	1		3			2
CO3	3	3		3	1		1
CO4	3	2	1	3	1		2
CO5	3	1	1	2	1		3

Legend: 3-High Correlation, 2-Medium Correlation, 1-Low Correlation

Instructional Strategy

- It is advised that teachers take steps to pique pupils' attention and boost their learning confidence.
- To help students learn and appreciate numerous concepts and principles in each area, teachers should provide examples from daily life, realistic situations, and real-world engineering and technological applications.
- The demonstration can make the subject exciting and foster in the students a scientific mindset. Student activities should be planned on all the topics.
- Throughout the course, a theory-demonstrate-practice-activity strategy may be used to ensure that learning is outcome- and employability-based.
- All demonstrations/Hand-on practices are under a simulated environment (may be followed by a real environment as far as possible).

WP231360	Basic Workshop Practices	L	T	P	C
Practicum		1	0	2	2

Assessment Methodology

	Continuous Assessment (40 marks)				End Semester Examination (60 marks)
	CA1	CA2	CA3	CA4	
Mode	Lab Assessment (Ex. 1, 2, 4, 7 & 8)	Lab Assessment (Ex. 3, 5, 6, 9 & 10)	Model Exam (Ex 1 to 10)	Class Assessment	Practical Examination
Duration	2 hours		3 hours	During Pratice Hours, every exercise should be evaluated to 10 marks	3 hours
Exam Marks	80	80	100	100	100
Converted to	10	10	10	10	60
Marks	20		20		60

WP231360	Basic Workshop Practices	L	T	P	C
Practicum		1	0	2	2

THEORY		
Unit I	SAFETY	
Introduction to safety – safety slogans – personal safety – personal protective Equipment - safety signs – caution sign, fire safety sign – sign posters – Industrial safety – machine safety rules – safety working practices, precaution to be taken to prevent electric shock-5S Principle – Sort, Set in order, Shine, Standardize and Sustain		3
Unit II	DIMENSIONING SYSTEM	
Limits - fits – tolerances – Allowances - types of fits – hole basis system - shaft basis system – simple examples – difference – geometric dimensioning – flatness, straightness, circularity, concentricity, run out, parallelism, perpendicularity, Angularity, cylindricity		3
Unit III	BASIC MEASURING INSTRUMENTS	
Basic instruments – steel rule, divider, calliper, try square, measuring tape, vernier calliper, micrometer - inside micrometer, outside micrometer - protractor- height gauge - dial gauge - V block, surface plate radius gauge, sine bar, slip gauge set, feeler gauge, wire gauge, Voltmeter, Ammeter, Multimeter.		3
Unit IV	BASIC TOOLS	
Fitting : Work holding devices – bench vice, machine vice, fixture - tool holding devices – hacksaw frame, drill chuck, sleeve – fitting tools – files - types – punches - center, dot punches – hammer – types - claw hammer- scribers – chisel - drill bit - straight shank - Tapper shank-hand reamer -hand taps. Screwdriver – types, uses - cutting pliers-types, uses, hand drilling machine. Wiring : Types of electrical wiring system – Single phase wiring - Three phase wiring – differences & applications Plumbing : Pipe vice, wrenches- types - pipe wrench, adjustable wrench, chain wrench, pipe cutter, Solution to join pipes, thread sealing tape for pipe fitting-screws-types.		3
Unit V	BASIC PRACTICES	
Fitting - Tools - Cutting practice – Filing practice. Wiring – Tools - wiring symbols - Circuit – Connection practice. Plumbing – Tools – type of joints - Joint practice.		3

Note: 1 Mark questions should be prepared unit wise (I to IV) as a question bank, the same can be used for the end semester examinations for 20 marks

WP231360	Basic Workshop Practices	L	T	P	C
Practicum		1	0	2	2

PRACTICAL		
Ex.No	Name of the Exercise	Hours
1	Fitting - Cutting & Filing of a profile	2
2	Fitting - Drilling, Reaming, Tapping	2
3	Fitting - L-Mating	2
4	Wiring – Draw the circuit diagram and connect for the connection of Two lamp, two switch with socket – parallel and series connection.	2
5	Wiring - Draw the circuit diagram and connect the connection for Fan-switch-regulator.	2
6	Wiring - Draw the circuit diagram and connect for the Stair case wiring	2
7	Installation of a battery, Charging and testing a Battery with hydrometer	2
8	Plumbing - Connect a tap using - PVC pipe, fittings and a tap	2
9	Plumbing – Connect the pipe line for the Sink / wash basin	2
10	Plumbing - Connect the pipe line for the connection for Rain water harvesting	2
Practice + Continuous Test + Revision		10
TOTAL HOURS		30

Suggested list of students activity

Prepare/Download a specification of the following:

- Various tools & Equipment in various shops.
- Precision equipment in the workshop.
- Various machinery in the workshop.
- Visit any fabrication/woodworking workshop and prepare a report.
- Prepare a 5S chart for each machine in your workshop and maintain this report during your Lab hours.

Text Books

- A Textbook of Manufacturing Process, Gupta, J.K., Khurmi, R.S. S.Chand and Co. New Delhi ISBN:81-219-3092-8 (Workshop Tech.) Publication.
- A Text Book of Electrical Technology B.L.Theraja, A.K.Theraja – S.Chand& Company Ltd.

Reference Books

- Basic Manufacturing "Roger Timings" Third Edition – Newnes, An imprint of Elsevier.
- Industrial Organisation and Engineering Economics – "T.R. Banga, S.C.Sharma"- Khanna Publishers
- Industrial Engineering and Management "O.P.Khana" – Dhanbat Rai Publications.
- Machine Drawing -K.L.Narayana, P.kannaiah, K.Venkatareddy – New Age International Publishers.
- Workshop practices, H S Bawa, Tata McGraw-Hill, 2009
- Elements of workshop Technology, Hajra Choudhury S. K., Hajra Choudry A.K. and Nirjhar Joy.
- Workshop Technology by Chapman W.A.J and Arnold E.

Web-based/Online Resources

https://onlinecourses.nptel.ac.in

Additional Instructions

- For the record of work done notebook or manual may be used. In this, the student should draw a diagram, and mention the readings/observations, calculations and result manually. The same has to be submitted for the end-semester examination on the first attempt.
- The proper safety procedure and norms should be followed with proper uniform (Khaki pants & half-hand shirt) with safety shoes during the practices.
- All the Exercise should be completed, One Exercise should be given by lot or question paper received from DOTE should be followed for the end semester Examination.

Allocation of Marks

Part	Description	Marks
	Fitting / Wiring / Plumbing	
A	Marking / Circuit diagram	25
B	List of tools	10
C	Cutting and Filing / Circuit / Pipe Connection	25
D	Dimension / Verification of Connection	20
E	Written Test (Theory Portion)	20
	TOTAL MARKS	100

Note: One Mark questions shall be given from the Theory Portions. 20 X 1 = 20 Marks

DS231270	Digital Workplace Skills	L	T	P	C
Practical		0	0	4	2

Introduction

Being able to embrace new technology in the workplace helps to streamline working processes. Digital workplace skills provide knowledge for sharing and collaboration in many new and effective ways. It is used in a connected digital environment providing access to share, present, and report information effectively and efficiently to increase productivity in a safe & secure environment.

Course Objectives

The objective of this course is to enable the student to

1. Introduce the basics of computer hardware, operating systems, and Internet usage.
2. Explore various office productivity tools and text processing.
3. Apply various information analysis tools with the help of spreadsheets.
4. Understand the effective presentation of information.
5. Identify the communication and security tools for information protection.

Course Outcomes

After successful completion of this course, the students should be able to

CO1: Demonstrate the ability to use various operating systems and internet utilities.
CO2: Experiment various office productivity tools.
CO3: Analyze the information gathered with the help of spreadsheet
CO4: Explore the various communication tools available
CO5: Identify the appropriate tools for securing the information.

Pre-requisites: Nil

CO/PO Mapping

CO / PO	PO1	PO2	PO3	PO4	PO5	PO6	PO7
CO1	3	3	3			3	1
CO2	3	3	3			3	2
CO3	3	3	3			3	1
CO4	3	3	3			3	2
CO5	3	3	3			3	2

Legend: 3-High Correlation, 2-Medium Correlation, 1-Low Correlation

DS231270	Digital Workplace Skills	L	T	P	C
Practical		0	0	4	2

Assessment Methodology

	Continuous Assessment (40 marks)			End Semester Examination (60 marks)
	CA1	CA2	CA2	
Mode	Practical Test (Ex. 1 to 5)	Practical Test (Ex. 6 to 10)	Practical Record Submission	Practical Examination
Duration	2 hours		--	3 hours
Exam Marks	40	40	20	100
Converted to	10	10	20	60
Marks	40			60

DS231270	Digital Workplace Skills	L	T	P	C
Practical		0	0	4	2

Unit I	INTRODUCTION TO DIGITAL WORKPLACE	
Basics of computer - understanding of various computer hardware components (CPU, Memory unit, Display, keyboard, mouse, hard disk and other peripheral devices) and operating systems (Windows, Linux)		2
Ex No 1 a) Basic Navigations in Operating Systems - Windows, Ubuntu etc b) Usage of Browsers (Edge, chrome etc) c) Usage of search engines (Google, Bing etc) (Students have to use any one tool in Board Examination for each of above exercise)		4
Unit II	BASIC PRODUCTIVITY TOOLS	
Exploring office tools- word document creation, basic editing, formatting, Tables, Page Break, Equations, Hyperlinks, and Pictures.		2
Ex No 2 Create a document with basic editing, formatting options, Tables, Equations, Hyperlinks, Pictures		4
Ex No 3 Create a standard covering letter and use mail merge to generate customized letters and generate labels by creating a database.		4
Unit III	INFORMATION ANALYSIS	
Sorting, Filtering, and creation of different charts. Print Preview, Printing, Shortcuts and Exercises. –using Excel /Google Sheets.		2
Ex No 4 Spreadsheet creation, data handling, formatting, calculations using formulae and functions using Excel / Google Sheets. (Students have to use any one tool in Board Examination)		4
Ex No 5 Sorting, Filtering, and creation of different charts. Print Preview, Printing-Using Excel / Google Sheets. (Students have to use any one tool in Board Examination)		4
Unit IV	INFORMATION PRESENTATION	
Creation of presentation, formatting, video and sound, slide animation, shortcuts – MS Power point, Google slides. Canva, Figma –designing.		4
Ex No 6 Creation of Presentation, editing, saving, Slide creation, Charts, Tables, Pictures, Smart Art, Slide Number, Header, Footer, Date, Shapes, Video and Sound. Slide Animation, Running a slide show, Print Preview. –PowerPoint, Google slides etc (Students have to use any one tool in Board Examination)		4

DS231270	Digital Workplace Skills	L	T	P	C
Practical		0	0	4	2

Ex No 7. Designing with Canva, Figma. (Students have to do any one tool in Board Examination)	4
Unit V	**COMMUNICATION TOOLS AND INTRODUCTION TO INFORMATION SECURITY**
Introduction to email and usage, overview of video and web conferencing tools, texting tools. Productivity tools in the browser-extension, Introduction to cyber security. Information management-Create a repository using Google Drive.	3
Ex No 8 a. Scheduling–meetings–Google Calendar. b. Mail–Gmail c. Information management- Collection of student Bio data using google forms	4
Ex No 9 Hands-on Video Conferencing Experience with Webex, zoom ,Google Meet etc (Any one tool for board practical examination).	4
Ex No 10 Password protection for sheets, Google drive sharing–permission.	4
Internal Assessment	4
TOTAL HOURS	**60**

Text Books

- NCERT, Chapter 1-3: Computer System, Encoding Scheme and Number Systems, Emerging Trends, Class XI, 2023.
- Carey, P., Des Jardins, C., Shaffer, A., Shellman, M. and Vodnik, S., New Perspectives Microsoft Office 365 & Office 2019: Introductory. Cengage Learning. ISBN:978-0357025741

Reference Book

- LawrenceMiller,KevinStrohmeyer,andMarkMargevicius,DigitalWorkspace,2019 by John Wiley & Sons Inc., Hoboken, NewJersey
- AnandShinde , Introduction to Cyber Security : Guide to the World of Cyber Security, Notion Press, 1st edition, 2021, ISBN:978-1637816424.

Web-based/Online Resources

https://www.futurelearn.com/info/blog/the-complete-guide-to-digital-skills
https://applieddigitalskills.withgoogle.com/
https://resources.owllabs.com/blog/video-conferencing-tools
https://www.canva.com/
https://www.figma.com/

DS231270	Digital Workplace Skills	L	T	P	C
Practical		0	0	4	2

Allocation of Marks for End Semester Examinations

Part	Description	Marks
Fitting / Wiring / Plumbing		
A	Aim	10
B	Procedure	40
C	Execution	35
D	Result	10
E	Viva-voce	5
TOTAL MARKS		100

BE231280	Basic English for Employability	L	T	P	C
Practical		0	0	4	2

Course Objectives

This course has two parts. A 20-hour exercise-based course and 40-hour face-to-face course.

The aim of the face-to-face course is to help develop their English language, communicative and allied skills through a series of reading, listening, grammar, speaking and topical lessons. The methodology through which the lessons are facilitated provide more opportunities for the learners to use the language they have acquired with constant monitoring and feedback.

The exercise-based course is a series of lessons which will be monitored by the faculty of the college. Each lesson focuses on reading, writing, listening, speaking, grammar and vocabulary.

Course Outcomes

Students will be able to:

1. Read and understand routine information and instructions, and the basic meaning of non-routine information only in a familiar area and re-reading as required.
2. Understand phrases and expression related to areas of personal, social and professional domains provided speech is clearly articulated.
3. Have basic conversations in English - in person and over the telephone
4. Successfully manage group discussion
5. Deliver short talks on familiar topics with confidence
6. Complete short essays on familiar topics
7. Use better and more varied vocabulary

Course Content

F2F COURSE CONTENT

UNIT 1

Functional language (speaking) - Greetings, Introductions and Farewell - Reading (posters) - for gist and for detail - Grammar refresher - Functional language (writing) - likes and dislikesListening (monologue) - for gist and for detail - Reading (catalogues) - for gist and for detail Grammar - Present simple (Be verb)

BE231280	Basic English for Employability	L	T	P	C
Practical		0	0	4	2

UNIT 2

Functional language (speaking) - Habits & routines using frequency - Functional language (Writing) - culture of a place - Listening (conversation)- gist and detail - Functional language (speaking) - Time References - Reading (news using past tense) - for gist and for detail - Grammar - Simple past - Functional language (Writing) - Describing past experiences - Listening (news using past tense) - gist and details

UNIT 3

Reading (newspaper article) - for gist and for detail - Grammar - Simple future - Functional language (speaking) - future plans - Functional language (Writing) - Making choices - Listening (newspaper article)- for gist and detail - Reading (signs and notices) - for gist and for detail - Grammar – Articles - Listening (announcements) - for gist and for detail

UNIT 4

Functional Language (speaking) - Expressing Opinions - Functional language (speaking) - Likes and dislikes - Reading (job advertisements) - for gist and for detail - Grammar – Pronouns - Listening (news)- gist and detail Functional language (speaking) – Thanks and apologies Functional language (speaking) – agree and disagree - Reading (email) – for gist and for detail

UNIT 5

Grammar – Prepositions - Listening (directions) - gist and details - Functional language (speaking) – Giving directions - Functional language (speaking) - enquiring/asking questions - Reading (newspaper article) - for gist and for detail - Grammar – modals Listening (conversation)- for gist and detail - Functional language (speaking) - day to day transactions (banks, post office, shops)

EXERCISE BASED COURSE

UNIT 1

Reading (descriptive) - for gist and detail - Grammar - Adjectives - Mind-mapping and writing structure - Listening (descriptive) - for gist & detail

BE231280	Basic English for Employability	L	T	P	C
Practical		0	0	4	2

UNIT 2

Functional Language (writing) - Describe personal experiences - Reading (prospectus) - for locate and isolate - Grammar - Conjunctions - Functional language (speaking) - Making comparisons

UNIT 3

Listening (prospectus) - for locate and isolate - Functional Language (speaking) - expressing feelings and emotions - Reading (geographical information) - for gist and detail – Punctuations

UNIT 4

Functional Language (speaking) - giving reasons and explanations - Listening (geographical information) - for gist & detail - Functional Language (writing) - Making appointments & reservations - Reading (rules & regulation) - for gist and detail

UNIT 5

Grammar – Adverbs - Functional Language (Speaking) - Accepting & Rejecting offers and invitations - Listening (rules and regulations) - for gist & detail - Phonics - Commonly Made Speaking Errors

For Further Reading

- English Grammar and Composition – Wren and Martin
- The Elements of Style – Strunk and White
- The Elevate Series (Improve English skills) – Shefali Ray, Samathmika Balaji and Simran Luthra
- Common Errors in Everyday English – Saumya Sharma
- Spoken English for My World – Sabina Pillai
- Email Writing for Beginners: Examples, Etiquette, and Mistakes – Yogesh Vermani
- Malgudi Days – RK Narayan
- Time Stops at Shamli – Ruskin Bond
- The Blue Umbrella – Ruskin Bond
- Here, There and Everywhere – Sudha Murthy

BE231280	Basic English for Employability	L	T	P	C
Practical		0	0	4	2

Reference

A workbook will be provided to each student for future reference.

Software Requirement

- Chrome version 52+, or Firefox version 50+, or Edge Windows 10 build 15019
- Operating System – Windows7+, Ubuntu
- Access to You Tube
- Access to https://english.steptest.in/
- Stable internet connection with 2Mbps speed via Wi-Fi or Ethernet or 4G hotspot

Hardware Requirement

- Desktop or laptop
- Compatible speakers or headphones with microphone
- Projector

TN POLYTECHNIC – REGULATION 2023

DIPLOMA IN ENGINEERING & TECHNOLOGY

SECOND SEMESTER SYLLABI

DIPLOMA IN ENGINEERING & TECHNOLOGY

NEW REGULATION - 2023

SECOND SEMESTER FINAL SYLLABI

S.No	SUBJECTS	SUBJECT CODE
1	APPLIED MATHEMATICS - I (Non-Circuit)	MA232431
2	APPLIED MATHEMATICS – II (Circuit)	MA232432
3	APPLIED PHYISCS -I (Non-Circuit)	PH232441
4	APPLIED PHYSICS -II (Circuit)	PH232442
5	APPLIED CHEMISTRY (Non-Circuit)	CH232451
6	APPLIED CHEMISTRY (Circuit)	CH232452
7	COMMUNICATIVE ENGLISH -II	EN232480
8	BASICS OF MECHANICAL ENGINEERING	ME232120
9	BASICS OF CIVIL ENGINEERING	CE232120
10	BASICS OF ELECTRICAL AND ELECTRONICS ENGINEERING	EE232120
11	BASICS OF COMPUTER ENGINEERING	CS232120
12	DRAFTING PRACTICES	DP232270
13	BASIC ENGINEERING PRACTICES	EP232460

MA232431	APPLIED MATHEMATICS – I [Non-circuit Branches]	L	T	P	C
Practicum		1	0	4	3

Introduction

The knowledge of Mathematics is necessary for a better understanding of all engineering and science subjects. Computer based visual representations such as graphs, animations, and tables of Mathematical ideas will enhance the applicability of Mathematics in engineering domains. This course is designed to give a comprehensive coverage at an introductory level to the topics of Coordinate Geometry, Differential Calculus, Integral Calculus and Statistical Process Control and some of their applications to engineering domains.

Course Objectives

The objective of this course is to enable the students to

- Summarize the properties of families of circles.
- Identify the type of conic represented by a general second-degree equation in two variables.
- Acquire knowledge in the principles of differentiation.
- Summarize the methods of integration and their engineering applications.
- Identify the statistical tools required for the quality control of manufacturing processes.

Course Outcomes

After successful completion of this course, the students should be able to

CO1: Determine whether two circles with given equations touch internally or externally.
CO2: Compute the vertex, focus, directrix and latus-rectum of parabola and ellipse.
CO3: Calculate limits and derivatives of one variable functions.
CO4: Evaluate definite integrals and indefinite integrals.
CO5: Determine the out-of-control signals in manufacturing processes.

Pre-requisites

High School Mathematics

CO/PO Mapping

CO / PO	PO1	PO2	PO3	PO4	PO5	PO6	PO7
CO1	3	3	2	1	1	1	3
CO2	3	3	2	1	1	1	3
CO3	3	3	2	1	1	1	3
CO4	3	3	2	1	1	1	3
CO5	3	3	2	1	1	1	3

Legend: 3-High Correlation, 2-Medium Correlation, 1-Low Correlation

Instructional Strategy

- Use explicit instruction for developing Math vocabulary and conceptual understanding.
- Use inducto-deductive approach to achieve the desired learning objectives.
- Use open-ended questions to nurture the problem-solving and reasoning skills among students.
- A theory-demonstrate-practice-activity strategy may be used throughout the course to ensure that learning is outcome-based and employability-based.
- Encourage students through illustrated problems and hand-on activities to use visual methods and simulations to solve real problems.

Assessment Methodology

	Continuous Assessment (40 marks)				End Semester Examination (60 marks)
	CA1	CA2	CA3	CA4	
Mode	Lab Test (Ex-1 to 4)	Written Test (Units-I to III)	Lab Test (Ex-5 to 10)	Record (Ex-1 to 10)	Practicum Exam
Duration	2 hours	2 hours	2 hours		3 hours
Exam Marks	70	30	70	100	100 (Theory:30+Practical:70)
Converted to	10	10	10	10	60
Marks	40				60

Note:

1) One practical exercise question shall be given for each CA1 and CA3. The mark allocation is Aim: 10 marks, Procedure: 20 marks, Output: 30 marks, Viva-voce: 10 marks.

2) 20 questions shall be given from the theory portion for CA2, out of which 15 have to be answered. Each question carries 2 marks.
3) Each experiment should be evaluated for 10 marks in CA4.

MA232431	APPLIED MATHEMATICS – I [Non-circuit Branches]	L	T	P	C
Practicum		1	0	4	3

Unit I	COORDINATE GEOMETRY – 1	
THEORY Equation of a circle with given centre and radius – General equation of circles – Centre and radius of a circle from general equation – Concentric circles – Contact of circles – Orthogonal circles – Simple problems.		3
PRACTICAL Basics of GeoGebra (Not for examinations) i. Familiarize the interfaces of GeoGebra such as Graphics View, Algebra View, Graphics2, Spreadsheet, Computer Algebra System (CAS), Probability Calculator and 3D Graphics. ii. Familiarize the Tool Bar and important tools of GeoGebra.		5
Ex-1: For the given equations of the circles $x^2 + y^2 + 2g_1x + 2f_1y + c_1 = 0$ and $x^2 + y^2 + 2g_2x + 2f_2y + c_2 = 0$ with appropriate coefficients, i. Graph the equations of the circles in the Cartesian plane. ii. Determine the coordinates of the centres and radii of the circles and mark them on the graph. iii. Determine the distance between the centres of the circles. iv. Determine whether the circles are touching each other or not. v. If the circles are touching each other, determine whether they are touching internally or externally. vi. Verify whether any of the relationships $C_1C_2 = r_1 + r_2$ or $C_1C_2 = \|r_1 - r_2\|$ holds or not.		5
Ex-2: A pair of spur gears consists of $(z_p =)$ 20 teeth pinion meshing with $(z_g =)$ 120 teeth gear. Let the module be $(m =)$ 4 mm. i. Calculate the pitch circle diameters of the pinion and the gear using the formulae $d_p = mz_p$ and $d_g = mz_g$. ii. Calculate the distance between the centres of the pinion and the gear using the formula $\frac{1}{2}(d_p + d_g)$. iii. Draw two externally touching circles to represent pinion and gear with appropriate centres and radii $\frac{1}{2}d_p$ and $\frac{1}{2}d_g$. Determine the equations of the pinion and gear. Calculate the distance between the centres of the circles from the graph and verify that it is equal to $\frac{1}{2}(d_p + d_g)$. iv. Calculate the tooth thickness using the formula $t = 1.5708m$. v. Calculate the gear ratio using the formula $i = \frac{z_g}{z_p}$.		6

Note: Appropriate values for $z_p, z_g, (z_g > z_p)$ and m can be assigned by the course teacher/examiner in Ex-2.	
Unit II **COORDINATE GEOMETRY – 2**	
THEORY General equation of conics – Classification of conics – Standard equations of parabola – Vertex, focus, axis, directrix, focal distance, focal chord, latus-rectum of parabola – Standard equations of ellipse – Vertices, foci, major axis, minor axis, directrices, eccentricity, centre and latus-rectums of ellipse – Simple problems.	3
PRACTICAL Ex-3: Do the following activities. (i) Draw the graphs of the parabolas $(y-k)^2 = 4a(x-h)$ and $(x-h)^2 = 4a(y-k)$ for the given values of a, b, h and k. Determine the vertex, focus, axis, directrix, latus-rectum of each parabola and mark them on the graphs. (ii) Draw the graphs of the ellipse $\frac{(x-h)^2}{a^2} + \frac{(y-k)^2}{b^2} = 1$ for the given values of a, b, h and k. Determine the eccentricity, centre, foci, vertices, major axis, minor axis, directrices, and latus-rectums and mark them on the graph.	5
Ex-4: Do the following activities for the given image of a parabolic shaped fly-over bridge. (i) Draw a parabola which fits the given bridge. (ii) Write the equation of the parabola. (iii) Find the vertex, focus, directrix and latus-rectum and mark them on the graph. (iv) Find the height and width of the bridge.	6
Unit III **DIFFERENTIAL CALCULUS**	
THEORY Limits of polynomials and rational functions – Limits of the form $\lim_{x\to 0} \frac{\sin ax}{bx}$ and $\lim_{x\to 0} \frac{\tan ax}{bx}$ (x in radians) (results only) – Definition of differentiability – Differentiation formulae for standard functions – Differentiation of sum, difference, product and quotient of functions – Chain rule – Second order derivatives – Radius of curvature – Simple problems.	3
PRACTICAL Ex-5: Do the following activities. (i) Graph the polynomial function $f(x) = a_n x^n + a_{n-1}x^{n-1} + \cdots + a_1 x + a_0$, where $a_n, a_{n-1}, \ldots, a_0$ are real numbers and $a_n \neq 0$. Find the value of $f(x)$ at $x = a$ and the limit of $f(x)$ at $x = a$. (ii) Graph the rational function $R(x) = \frac{a_n x^n + a_{n-1}x^{n-1} + \cdots + a_1 x + a_0}{b_m x^m + b_{m-1}x^{m-1} + \cdots + b_1 x + b_0}$, where $a_n, a_{n-1}, \ldots, a_0, b_m, b_{m-1}, \ldots, b_0$ are real numbers and $a_n, b_m \neq 0$. Find the value of $f(x)$ and the limit of $f(x)$ at $x = a$. (iii) Graph the functions $\frac{\sin ax}{bx}$ and $\frac{\tan ax}{bx}$ where a and b are real numbers and $a, b \neq 0$. Evaluate $\lim_{x\to 0} \frac{\sin ax}{bx}$ and $\lim_{x\to 0} \frac{\tan ax}{bx}$. (iv) Graph the functions $c\ (constant)$, x^n, $\sin x$, $\cos x$, $\tan x$, $\operatorname{cosec} x$, $\sec x$, $\cot x$, e^x and	5

$\log x$. Find their first derivative and second derivative. Note: Only two functions will be given in Board Practical Examination in subdivision-(iv) of Ex-5. Ex-6: Two parallel straights of $'x'$ m apart are to be connected by a reverse curve consisting of arcs of same radius. The distance between the end points of the curve is $'y'$ m. (i) Find the approximate value of the common radius. (ii) Find the length of the whole curve.	6
Unit IV **INTEGRAL CALCULUS**	
THEORY Integration formulae of standard functions as inverse operation of differentiation – Bernoulli's formula – Definite integrals (Properties are excluded) – Area and volume using integration – Simple problems.	3
PRACTICAL Ex-7: Do the following activities. i. Graph the functions $c\ (constant)$, $x^n, n \in \mathbb{R}$, e^x, $\sin x$, $\cos x$, $\sec^2 x$, $\mathrm{cosec}^2 x$, $\sec x \tan x$ and $\mathrm{cosec} x \cot x$. Find their indefinite integrals. ii. Evaluate the definite integral $\int_a^b f(x)\,dx$ and relate it to the area under the curve $y = f(x)$ between x-axis, $x = a$ and $x = b$. iii. Find the volume of the solid generated by the revolution of the area bounded by $y = f(x)$, x-axis, $x = a$ and $x = b$ about x-axis. Note: Only two functions will be given in Board Practical Examination in subdivision-(i) of Ex-7.	5
Ex-8: Do the following activities for the given image of a closed irregular plane figure. i. Mark the required number of points on the boundary of the figure. ii. Draw the boundary of the figure by joining the points. iii. Divide the figure into trapeziums using the points on the boundary. iv. Calculate the approximate area of the figure.	6
Unit V **STATISTICAL PROCESS CONTROL**	
THEORY Random variables – Continuous random variables – Normal distribution – Process average and process variation using arithmetic mean and variance – Central line (CL), upper control limit (UCL) and lower control limit (LCL) – Control charts – $\bar{X}$ charts – Out-of-control signals – Simple problems.	3
PRACTICAL Ex-9: Do the following activities. i. Find the mean μ for the given data $x_1, x_2, x_3, \ldots, x_{50}$ of size $N = 50$. ii. Find the variance σ^2 and standard deviation σ forthe data given in (i). iii. Fit the normal curve $f(x) = N(\mu, \sigma^2) = \frac{1}{\sigma\sqrt{2\pi}} e^{-\frac{1}{2}\left(\frac{x-\mu}{\sigma}\right)^2}, -\infty < x < \infty$.	5

iv. Calculate the probability $p = P(X_1 < X < X_2)$ for some X_1, X_2 in the range of the data given in (i) using the formula $\int_{X_1}^{X_2} f(x)dx$. Verify the answer using probability calculator.

v. Calculate the number of data points in the interval (X_1, X_2) using the formula $n = Np$.

Ex-10:

Consider the 4 samples each of size 5 taken from the production lot of a machine.

Sample Number	S_{i1}	S_{i2}	S_{i3}	S_{i4}	S_{i5}
S_1	x_{11}	x_{12}	x_{13}	x_{14}	x_{15}
S_2	x_{21}	x_{22}	x_{23}	x_{24}	x_{25}
S_3	x_{31}	x_{32}	x_{33}	x_{34}	x_{35}
S_4	x_{41}	x_{42}	x_{43}	x_{44}	x_{45}

i. Calculate the sample means $\bar{S}_1$, $\bar{S}_2$, $\bar{S}_3$, $\bar{S}_4$ and the mean of the sample means $\bar{S} = \frac{\bar{S}_1+\bar{S}_2+\bar{S}_3+\bar{S}_4}{4}$.

ii. Calculate the sample variances v_1, v_2, v_3, v_4 and $\sigma = \sqrt{\frac{1}{4}\sum_{i=1}^{4} v_i}$.

iii. Determine the central line $CL = \bar{S}$, lower control limit $LCL = \bar{S} - \frac{2.58}{\sqrt{5}}\sigma$ and upper control limit $UCL = \bar{S} + \frac{2.58}{\sqrt{5}}\sigma$.

iv. Draw the $\bar{X}$ chart and determine the out-of-control signals.

6

TOTAL HOURS	**75**

Note: While setting up the practical exercise questions, the course teacher/examiner shall assign appropriate functions/constants wherever they are not mentioned explicitly.

Suggested List of Students Activities

Other than classroom learning, the following are the suggested student related co-curricular activities which can be undertaken to accelerate the attainment of the various outcomes in this course.

- Explore the working principle of gear wheels in laboratory.
- Find the equation of a parabolic bridge using GeoGebra simulation
- Find the radius of curvature of an image of a train road.
- Find the volume of a water bottle using GeoGebra simulation of the image of the bottle.
- Collect samples from an industry and draw $\bar{X}$ chart for the data.

References

1. Higher Secondary First Year Mathematics Volume-I & Volume-II, Tamil Nadu Textbook and Educational Services Corporation, Government of Tamil Nadu, 2022.
2. Higher Secondary Second Year Mathematics Volume-I & Volume-II, Tamil Nadu Textbook and Educational Services Corporation, Government of Tamil Nadu, 2022.
3. John Bird, Higher Engineering Mathematics, Newnes (Elsevier), 6th Edition, 2010.
4. Grewal, B.S., Higher Engineering Mathematics, Khanna Publishers, 42nd Edition, 2012.
5. Deepak Singh, Mathematics-I, Khanna Book Publishing Co. (P) Ltd., 2021.
6. Garima Singh, Mathematics-II, Khanna Book Publishing Co. (P) Ltd., 2021.
7. John Vince, Calculus for Computer Graphics, Second Edition, Springer, 2019.
8. GeoGebra Manual, The Official Manual of GeoGebra (PDF Version), 2016.
9. GeoGebra Handbook for Senior Secondary Mathematics Teachers, Regional Institute of Education, Mysuru, 2016.
10. Steve Phelps, An Introduction to GeoGebra, GeoGebra Institute of Ohio, University of Cincinnati.

Web-based/Online Resources

1. https://www.khanacademy.org/math/
2. https://www.mathportal.org/
3. https://openstax.org/subjects/math
4. https://www.mathhelp.com/
5. https://www.geogebra.org/
6. https://www.desmos.com/
7. https://phet.colorado.edu/

Hardware Requirement

- Desktop Computers: 30 + 2 Nos.
- Projector and Screen
- Printer

Software Requirement

- Operating System: Windows 7 or later
- GeoGebra Classic 5 (Free version)

Allocation of Marks for End Semester Exam

Part	Description	Marks
A	Written Test (Theory Portion)	30
B	Aim	10
C	Procedure	20
D	Output	30
E	Viva-voce	10
Total		**100**

Note:

1) 20 questions shall be given from the theory portion, out of which 15 have to be answered. Each question carries 2 marks.
2) One practical exercise question shall be given for practical exam.

MA232432	APPLIED MATHEMATICS – II [Circuit Branches]	L	T	P	C
Practicum		1	0	4	3

Introduction

The knowledge of Mathematics is necessary for a better understanding of all engineering and science subjects. Computer based visual representations such as graphs, animations, and tables of Mathematical ideas will enhance the applicability of Mathematics in engineering domains. This course is designed to give a comprehensive coverage at an introductory level to the topics of Coordinate Geometry, Trigonometry, Complex Numbers, Differential Calculus and Integral Calculus and some of their applications to engineering domains.

Course Objectives

The objective of this course is to enable the students to

- Identify the type of conic represented by a general second-degree equation in two variables.
- Understand the properties of inverse trigonometric functions.
- Identify the applications of complex numbers in solving engineering problems.
- Acquire knowledge in the principles of differentiation.
- Summarize the methods of integration and their engineering applications.

Course Outcomes

After successful completion of this course, the students should be able to

CO1: Compute the vertex, focus, directrix and latus-rectum of parabola and ellipse.
CO2: Solve problems using the properties of inverse trigonometric functions.
CO3: Solve problems using arithmetic operations on complex numbers.
CO4: Calculate limits and derivatives of one variable functions.
CO5: Evaluate definite integrals and indefinite integrals.

Pre-requisites

High School Mathematics

CO/PO Mapping

CO / PO	PO1	PO2	PO3	PO4	PO5	PO6	PO7
CO1	3	3	2	1	1	1	3
CO2	3	3	2	1	1	1	3
CO3	3	3	2	1	1	1	3
CO4	3	3	2	1	1	1	3
CO5	3	3	2	1	1	1	3

Legend: 3-High Correlation, 2-Medium Correlation, 1-Low Correlation

Instructional Strategy

- Use explicit instruction for developing Math vocabulary and conceptual understanding.
- Use inducto-deductive approach to achieve the desired learning objectives.
- Use open-ended questions to nurture the problem-solving and reasoning skills among students.
- A theory-demonstrate-practice-activity strategy may be used throughout the course to ensure that learning is outcome-based and employability-based.
- Encourage students through illustrated problems and hand-on activities to use visual methods and simulations to solve real problems.

Assessment Methodology

	Continuous Assessment (40 marks)				End Semester Examination (60 marks)
	CA1	CA2	CA3	CA4	
Mode	Lab Test (Ex-1 to 4)	Written Test (Units-I to III)	Lab Test (Ex-5 to 10)	Record (Ex-1 to 10)	Practicum Exam
Duration	2 hours	2 hours	2 hours		3 hours
Exam Marks	70	30	70	100	100 (Theory:30+Practical:70)
Converted to	10	10	10	10	60
Marks	40				60

Note:

1) One practical exercise question shall be given for each CA1 and CA3. The mark allocation is Aim: 10 marks, Procedure: 20 marks, Output: 30 marks, Viva-voce: 10 marks.

2) 20 questions shall be given from the theory portion for CA2, out of which 15 have to be answered. Each question carries 2 marks.
3) Each experiment should be evaluated for 10 marks in CA4.

MA232432	APPLIED MATHEMATICS –II [Circuit Branches]	L	T	P	C
Practicum		1	0	4	3

Unit I	COORDINATE GEOMETRY	
THEORY General equation of conics – Classification of conics – Standard equations of parabola – Vertex, focus, axis, directrix, focal distance, focal chord, latus-rectum of parabola – Standard equations of ellipse – Vertices, foci, major axis, minor axis, directrices, eccentricity, centre and latus-rectums of ellipse – Simple problems.		3
PRACTICAL Basics of GeoGebra (Not for examinations) i. Familiarize the interfaces of GeoGebra such as Graphics View, Algebra View, Graphics2, Spreadsheet, Computer Algebra System (CAS), Probability Calculator and 3D Graphics. ii. Familiarize the Tool Bar and important tools of GeoGebra.		5
Ex-1: Do the following activities. (i) Draw the graphs of the parabolas $(y-k)^2 = 4a(x-h)$ and $(x-h)^2 = 4a(y-k)$ for the given values of a, b, h and k. Determine the vertex, focus, axis, directrix, latus-rectum of each parabola and mark them on the graphs. (ii) Draw the graphs of the ellipse $\frac{(x-h)^2}{a^2} + \frac{(y-k)^2}{b^2} = 1$ for the given values of a, b, h and k. Determine the eccentricity, centre, foci, vertices, major axis, minor axis, directrices, and latus-rectums and mark them on the graph.		5
Ex-2: Do the following activities for the given image of a parabolic shaped satellite dish antenna. (i) Draw a parabola which fits the given image of the dish antenna. (ii) Write the equation of the parabola. (iii) Find the vertex, focus, directrix and latus-rectum and mark them on the graph. (iv) How far from the vertex should the receiver of the antenna be placed?		6
Unit II	**INVERSE TRIGONOMETRIC FUNCTIONS**	
THEORY Recapitulation of domain and range of $\sin x, \cos x, \tan x, \operatorname{cosec} x, \sec x$ and $\cot x$ and their graphs – Definition of inverse trigonometric functions – Domain and range of $\sin^{-1} x, \cos^{-1} x, \tan^{-1} x, \operatorname{cosec}^{-1} x, \sec^{-1} x, \cot^{-1} x$ and their graphs – Principle values of inverse trigonometric functions – Simple problems.		3

PRACTICAL Ex-3: Do the following activities. i. Draw the graphs of $\sin x, \cos x, \tan x, \operatorname{cosec} x, \sec x$ and $\cot x$ and write their domain and range. Find the maximum value, minimum value, amplitude and periodicity of $\sin x, \cos x, \tan x, \operatorname{cosec} x, \sec x$ and $\cot x$. ii. Draw the graphs of $\sin^{-1} x, \cos^{-1} x, \tan^{-1} x, \operatorname{cosec}^{-1} x, \sec^{-1} x$ and $\cot^{-1} x$ and write their domain and range. Find the maximum value and minimum value of $\sin^{-1} x, \cos^{-1} x, \tan^{-1} x, \operatorname{cosec}^{-1} x, \sec^{-1} x$ and $\cot^{-1} x$. Note: Only two functions will be given in Board Practical Examination in all subdivisions of Ex-3.	5
Ex-4: The alternating current passing through a circuit is $i(t) = I_m \sin \omega t$, where I_m is the maximum value of current and ω is the angular velocity. Let R be the resistance and V_m be the maximum voltage. i. Graph the sinusoidal waveform of $i(t)$ for the given values of I_m and ω. ii. Calculate the maximum voltage V_m using the formula $V_m = I_m R$ for the given value of R. iii. Graph the sinusoidal waveform of voltage using the formula $v(t) = V_m \sin\left(\omega t + \frac{\pi}{2}\right)$. iv. Determine the value of root mean square (r.m.s) current. v. Determine the frequency. vi. Calculate the instantaneous value of the current at t sec.	6

Unit III	**COMPLEX NUMBERS**
THEORY Definition of a complex number – Real and imaginary parts – Modulus and argument – Polar form of a complex number – Conjugate of a complex number – Representation of complex numbers on Argand plane – Addition, subtraction, multiplication and division of complex numbers – De-Moivre's theorem (without proof) - Simple problems.	3

PRACTICAL Ex-5: Do the following activities. i. Mark the given complex number z on the Argand plane. Find the real and imaginary parts of z. Find the distance of z from x-axis and relate it to the real part of z. Find the distance of z from y-axis and relate it to the imaginary part of z. ii. Find the conjugate of z. Mark $\bar{z}$ on the Argand plane. Find the reflection of z on x-axis and relate it to $\bar{z}$. iii. Find the modulus of z. Find the distance between z and origin of the Argand plane and relate it to the modulus of z. Find the modulus of $\bar{z}$ and relate it to the modulus of z. iv. Find the argument of z. Find the angle between the line segment Oz and x axis and relate it to the argument of z. Find the argument of $\bar{z}$ and relate it to the argument of z.	5
Ex-6: Do the following activities. i. The representation of apparent power as phasor sum of active power and reactive power is given by $S = 550 + 952.63j$. Draw the phasor diagram of the system. Find the numerical value of the apparent power. Also calculate the phase angle and power factor of the system. ii. A machine takes 10KW (real power, P) at a power factor of 0.6 from 400V supply. Calculate the total load in KVA and KVAR. Represent the apparent power as a phasor sum of active power and reactive power. Note: The course teacher/examiner can assign appropriate values for S, P, power factor and supply in Ex-6.	6
Unit IV **DIFFERENTIAL CALCULUS**	
THEORY Limits of polynomials and rational functions – Limits of the form $\lim_{x\to 0}\frac{\sin ax}{bx}$ and $\lim_{x\to 0}\frac{\tan ax}{bx}$ (x in radians) (results only) – Definition of differentiability – Differentiation formulae for standard functions – Differentiation of sum, difference, product and quotient of functions – Chain rule – Second order derivatives – Maxima and minima – Simple problems.	3
PRACTICAL Ex-7: Do the following activities. (i) Graph the polynomial function $f(x) = a_n x^n + a_{n-1}x^{n-1} + \cdots + a_1 x + a_0$, where $a_n, a_{n-1}, \ldots, a_0$ are real numbers and $a_n \neq 0$. Find the value of $f(x)$ at $x = a$ and the limit of $f(x)$ at $x = a$. (ii) Graph the rational function $R(x) = \frac{a_n x^n + a_{n-1}x^{n-1} + \cdots + a_1 x + a_0}{b_m x^m + b_{m-1}x^{m-1} + \cdots + b_1 x + b_0}$, where a_n, $a_{n-1}, \ldots, a_0, b_m, b_{m-1}, \ldots, b_0$ are real numbers and $a_n, b_m \neq 0$. Find the value of $f(x)$ and the limit of $f(x)$ at $x = a$. (iii) Graph the functions $\frac{\sin ax}{bx}$ and $\frac{\tan ax}{bx}$ where a and b are real numbers and $a, b \neq 0$. Evaluate $\lim_{x\to 0}\frac{\sin ax}{bx}$ and $\lim_{x\to 0}\frac{\tan ax}{bx}$. (iv) Graph the functions $c\ (constant)$, x^n, $\sin x$, $\cos x$, $\tan x$, $\operatorname{cosec} x$, $\sec x$, $\cot x$, e^x and $\log x$. Find their first derivative and second derivative. Note: Only two functions will be given in Board Practical Examination in subdivision-(iv) of	5

Ex-7. Ex-8: The alternating current passing through a circuit is $i(t) = I_m \sin \omega t$ where, I_m is the maximum value of current and ω is the angular velocity. Let L be the inductance. (i) Graph the sinusoidal wave form of $i(t)$ for the given values of I_m and ω. (ii) Graph the voltage using the formula $v(t) = L\frac{di(t)}{dt}$ for the given value of L. (iii) Determine the values of $i(t)$ and $v(t)$ for a fixed t and different values of ω. (iv) Determine the values of $i(t)$ and $v(t)$ for fixed value of ω and different values of t. (v) Determine the values of t for which $i(t)$ and $v(t)$ are equal.	6
Unit V **INTEGRAL CALCULUS**	
THEORY Integration formulae of standard functions as inverse operation of differentiation – Bernoulli's formula – Definite integrals (Properties are excluded) – Area and volume using integration – Simple problems.	3
PRACTICAL Ex-9: Do the following activities. i. Graph the functions $c\ (constant)$, $x^n, n \in \mathbb{R}$, e^x, $\sin x$, $\cos x$, $\sec^2 x$, $\mathrm{cosec}^2 x$, $\sec x \tan x$ and $\mathrm{cosec} x \cot x$. Find their indefinite integrals. ii. Evaluate the definite integral $\int_a^b f(x)\,dx$ and relate it to the area under the curve $y = f(x)$ between x-axis, $x = a$ and $x = b$. iii. Find the volume of the solid generated by the revolution of the area bounded by $y = f(x)$, x-axis, $x = a$ and $x = b$ about x-axis. Note: Only two functions will be given in Board Practical Examination in subdivision-(i) of Ex-9.	5
Ex-10: Let V be the voltage, L be the inductance and R be the resistance of a circuit. i. Graph the function of current at time t using the formula $I(t) = \frac{V}{R}\left(1 - e^{-\frac{Rt}{L}}\right)$. ii. Graph the function of charge passing through the coil at time t using the formula $Q(t) = \int I(t)dt$. iii. Find the values of $I(t)$ and $Q(t)$ for given values of V, L and R at different t values. iv. Find the values of $I(t)$ and $Q(t)$ at a fixed time for different values of V, L and R.	6
TOTAL HOURS	**75**

Note: While setting up the practical exercise questions, the course teacher/examiner shall assign appropriate functions/constants wherever they are not mentioned explicitly.

Suggested List of Students Activities

Other than classroom learning, the following are the suggested student related co-curricular activities which can be undertaken to accelerate the attainment of the various outcomes in this course.

- Operate a cathode-ray oscilloscope (CRO) and visualize the formation of ellipse on the screen.
- Examine a satellite dish antenna and verify that the receiver is fixed at its focus.
- Draw the phasor diagram and visualize the triangular relationship between apparent power, active power and reactive power.
- Find the height of a mountain using GeoGebra simulation of the image of the mountain.
- Find the volume of a water bottle using GeoGebra simulation of the image of the bottle.

References

1. Higher Secondary First Year Mathematics Volume-I & Volume-II, Tamil Nadu Textbook and Educational Services Corporation, Government of Tamil Nadu, 2022.
2. Higher Secondary Second Year Mathematics Volume-I & Volume-II, Tamil Nadu Textbook and Educational Services Corporation, Government of Tamil Nadu, 2022.
3. John Bird, Higher Engineering Mathematics, Newnes (Elsevier), 6th Edition, 2010.
4. Grewal, B.S., Higher Engineering Mathematics, Khanna Publishers, 42nd Edition, 2012.
5. Deepak Singh, Mathematics-I, Khanna Book Publishing Co. (P) Ltd., 2021.
6. Garima Singh, Mathematics-II, Khanna Book Publishing Co. (P) Ltd., 2021.
7. John Vince, Calculus for Computer Graphics, Second Edition, Springer, 2019.
8. GeoGebra Manual, The Official Manual of GeoGebra (PDF Version), 2016.
9. GeoGebra Handbook for Senior Secondary Mathematics Teachers, Regional Institute of Education, Mysuru, 2016.
10. Steve Phelps, An Introduction to GeoGebra, GeoGebra Institute of Ohio, University of Cincinnati.

Web-based/Online Resources

1. https://www.khanacademy.org/math/
2. https://www.mathportal.org/
3. https://openstax.org/subjects/math
4. https://www.mathhelp.com/
5. https://www.geogebra.org/
6. https://www.desmos.com/
7. https://phet.colorado.edu/

Hardware Requirement

- Desktop Computers: 30 + 2 Nos.
- Projector and Screen
- Printer

Software Requirement

- Operating System: Windows 7 or later
- GeoGebra Classic 5 (Free version)

Allocation of Marks for End Semester Exam

Part	Description	Marks
A	Written Test (Theory Portion)	30
B	Aim	10
C	Procedure	20
D	Output	30
E	Viva-voce	10
Total		**100**

Note:

1) 20 questions shall be given from the theory portion, out of which 15 have to be answered. Each question carries 2 marks.
2) One practical exercise question shall be given for practical exam.

PH232441	APPLIED PHYSICS – I [NON-CIRCUIT BRANCHES]	L	T	P	C
Practicum		1	0	2	2

Introduction
This course will give the outline of applications of some important physics principles which are relevant for non-circuit polytechnic branches.

Course Objectives
The objective of this course is to

1. Discuss the basics of rigid body dynamics
2. Explain the properties of fluids and its relevance to technological fields
3. Outline the relevance of acoustic principles, SONAR
4. Give basics of current, voltage and ohm's law and its applications in engineering field

Course Outcomes

After successful completion of this course, the students should be able to

CO1: Calculate the moment of inertia, center of mass, center gravity of various objects and
CO2: Compare the surface tension and viscosity of various engineering materials
CO3: Formulate acoustic guidelines for buildings, mechanical structures,
CO4: Construct simple DC circuits

Pre-requisites

10th standard physics

CO/PO Mapping

CO / PO	PO1	PO2	PO3	PO4	PO5	PO6	PO7
CO1	3	3	2	1	1	1	3
CO2	3	3	2	1	1	1	3
CO3	3	3	2	1	1	1	3
CO4	3	3	2	1	1	1	3

Legend: 3-High Correlation, 2-Medium Correlation, 1-Low Correlation

Instructional Strategy

- It is advised that teachers take steps to pique pupils' attention and boost their learning confidence.
- To help students learn and appreciate numerous concepts and principles in each area, teachers should provide examples from daily life, realistic situations, and real-world engineering and technological applications.
- The demonstration can make the subject exciting and foster in the students a scientific mindset. Student activities should be planned on all the topics.
- Throughout the course, a theory-demonstrate-practice-activity strategy may be used to ensure that learning is outcome- and employability-based.
- Do not let students work on an activity or an experiment with the expected outcome, rather allow students to be honest about whatever the results of the experiment are. If the results are different from the expectations, students should do an analysis where they could be the source of error, if any.

Assessment Methodology

	Continuous Assessment (40 marks)					End Semester Examination (60 marks)
	CA1		CA2		CA3	
Mode	Written exam Unit 1	Practical exam 4 expts	Written exam Unit 2	Practical exam 4 expts	Model Practical exam	Practical exam
					8 expts	8 expts
Duration	1hour	2 hours	1 hour	2 hours	3 hours	3 hours
Exam Marks	20	60	20	60	100	100
Converted to	20		20		20	60
Final marks	20				20	60

Note:

- Average of CA 1 and CA 2 should be considered for the internal assessment of 20 marks
- CA 3 Model examination should be conducted as per the End Semester guidelines. The same should be considered for the internal assessment of 20 marks

PH232441	APPLIED PHYSICS – I [NON-CIRCUIT BRANCHES]	L	T	P	C
Practicum		1	-	2	2

Unit I	PROPERTIES OF RIGID BODY AND FLUIDS
Rigid boy – Centre of mass – Centre of gravity – Examples – Torque-Moment of inertia of a rigid body about an axis – Expression – radius of gyration – Moment of inertia of symmetric objects (thin rod, disc, ring, hollow and solid cylinder) – parallel and perpendicular axis theorem (no derivation)- Examples. Fluids – streamline flow, turbulent flow - critical velocity –Surface tension – application of capillarity - Viscosity -Definition and SI units- Coefficient of Viscosity – Reynolds number	6 periods
Experiment #1: Determination of moment of inertia of disc using torsional pendulum **Experiment #2**: Determination of moment of inertia of rigid rod about center of mass- compound pendulum **Experiment #3**: Determination of Surface tension of liquid by Capillary rise method **Experiment #4**: Determination of coefficient of Viscosity of highly viscous liquid by Stokes method	9 periods
Unit II	**BASICS OF SOUND AND ELECTRICITY**
Wave motion – audible range – infrasonic and ultrasonic – longitudinal, transverse and progressive waves – standing waves – free and forced vibration – laws of transverse vibration -Sonometer – acoustics of buildings – echo – reverberation – reverberation time – Sabine formula (no derivation) – Noise pollution - Doppler effect – applications. Current – Voltage - Ohm's law – resistance – resistivity - effective resistance - Kirchhoff current and voltage law – Wheatstone bridge - Joule's law of heating –applications of heating effect of electric current	6 periods
Experiment #5: Determination of frequency of tuning fork - Sonometer. **Experiment #6**: Determination of the resistance and resistivity of a given coil - Wheatstone bridge. **Experiment #7**: Verification of laws of resistances – Ohm's law **Experiment #8**: Determination of specific heat capacity of liquid- Joule's calorimeter.	15 periods
Test & Assesment	9
TOTAL PERIODS	**45**

Suggested List of Students Activity

- Presentation/Seminars by students on any recent technological developments based on the course
- Periodic class quizzes conducted on a weekly/fortnightly based on the course
- Micro project that shall be an extension of any practical lab exercise to real-world application

Reference

1. XIth and XIIth standard Tamilnadu State Board Physics Text Book, 2023 edition, Textbook Corporation Tamil Nadu
2. H.C.Verma, Concepts of Physics Vol 1 & Vol 2, Bharathi Bhavan Publishers, 1st edition, 2021

Web-based/Online Resources

1. https://youtu.be/Jtud5iwTd_I?si=zTGcQdimzT0FXtzY
2. https://www.youtube.com/watch?v=nVPrWz8Jfgo&list=PLqwfRVlgGdFBVn3o5AmfJGhSv9NXM_XKc&ab_channel=khanacademymedicine
3. https://www.youtube.com/watch?v=ZcZQsj6YAgU&list=PLqwfRVlgGdFBHGEZdkmGzKGufuV5I3z0v&ab_channel=KhanAcademyPhysics
4. https://www.youtube.com/watch?v=F_vLWkkOETI&list=PLqwfRVlgGdFC7HLoajCVjUk23cqy4QvRL&ab_channel=KhanAcademy

Allocation of marks in End semester practical and model practical exams:

S.No	Description	Marks
1	Aim	5
2	Apparatus required	5
3	Formulas, explanations, tabular column, Schematic diagram	10
4	Observations & Reading taken	50
5	Calculations	20
6	Result	5
7	Viva voce	5
	Total	100

Allocation of marks in CA 1 & CA2 practical exams:

S.No	Description	Marks
1	Aim	2
2	Apparatus required	2
3	Formulas, explanations, tabular column, Schematic diagram	6
4	Observations & Reading taken	25
5	Calculations	10
6	Result	5
7	Observation note book	10
	Total	60

Allocation of marks in CA 1 & CA 2 theory exams:

Part A: 7 questions: 5 questions have to be answered,		5 X 2 = 10 marks
Part B: 3 questions: 2 questions have to answered,		2 X 5 = 10 marks
		---
	Total	20 marks

PH232442	APPLIED PHYSICS – II (CIRCUIT BRANCHES)	L	T	P	C
Practicum		1	0	2	2

Introduction
This course will give the outline of applications of some important physics and chemistry principles which are relevant for non-circuit polytechnic branches

Course Objectives
The objective of this course is to
- Outline the relevance of acoustic principles, SONAR
- Discuss the properties of light, refractive index, optoelectronic devices
- Define Current, voltage, ohm's law and simple DC circuit
- Introduces the basics of magnetism and Faraday law of Electromagnetic induction and its applications in engineering field

Course Outcomes
On successful completion of this course, the student will be able to

CO1: Design building structures with safe acoustic guidelines
CO2: Apply optics principles properly to understand the working of technological gadgets and computer and device interfacing
CO3: Construct simple DC circuit and troubleshoot problems in the circuits
CO4: Calculate the effective resistance in series and parallel circuits, classify the materials based on magnetic properties

Pre-requisites
10th standard physics

CO/PO Mapping

CO / PO	PO1	PO2	PO3	PO4	PO5	PO6	PO7
CO1	3	3	2	1	1	1	3
CO2	3	3	2	1	1	1	3
CO3	3	3	2	1	1	1	3
CO4	3	3	2	1	1	1	3

Legend: 3-High Correlation, 2-Medium Correlation, 1-Low Correlation

Instructional Strategy
- It is advised that teachers take steps to pique pupils' attention and boost their learning confidence.

- To help students learn and appreciate numerous concepts and principles in each area, teachers should provide examples from daily life, realistic situations, and real-world engineering and technological applications.
- The demonstration can make the subject exciting and foster in the students a scientific mindset. Student activities should be planned on all the topics.
- Throughout the course, a theory-demonstrate-practice-activity strategy may be used to ensure that learning is outcome- and employability-based.
- Do not let students work on an activity or an experiment with the expected outcome, rather allow students to be honest about whatever the results of the experiment are. If the results are different from the expectations, students should do an analysis where they could be the source of error, if any.

Assessment Methodology

<table>
<tr><th rowspan="2"></th><th colspan="5">Continuous Assessment (40 marks)</th><th rowspan="2">End Semester Examination (60 marks)</th></tr>
<tr><th colspan="2">CA1</th><th colspan="2">CA2</th><th>CA3</th></tr>
<tr><td rowspan="2">Mode</td><td rowspan="2">Written exam Unit 1</td><td rowspan="2">Practical exam 4 expts</td><td rowspan="2">Written exam Unit 2</td><td rowspan="2">Practical exam 4 expts</td><td>Model Practical exam</td><td>Practical exam</td></tr>
<tr><td>8 expts</td><td>8 expts</td></tr>
<tr><td>Duration</td><td>1hour</td><td>2 hours</td><td>1 hour</td><td>2 hours</td><td>3 hours</td><td>3 hours</td></tr>
<tr><td>Exam Marks</td><td>20</td><td>60</td><td>20</td><td>60</td><td>100</td><td>100</td></tr>
<tr><td>Converted to</td><td colspan="2">20</td><td colspan="2">20</td><td>20</td><td>60</td></tr>
<tr><td>Final marks</td><td colspan="4">20</td><td>20</td><td>60</td></tr>
</table>

Note:

- Average of CA 1 or CA 2 mark should be considered for the internal assessment of 20 marks
- CA 3 Model examination should be conducted as per the End Semester guidelines. The same should be considered for the internal assessment of 20 marks.

PH232442	APPLIED PHYSICS – II (CIRCUIT BRANCHES)	L	T	P	C
Practicum		1	0	2	2

Unit I	SOUND & OPTICS	
Wave motion – audible range – infrasonic and ultrasonic – longitudinal, transverse and progressive waves – standing waves – free and forced vibration – Sonometer – acoustics of buildings – echo – reverberation – reverberation time – Sabine formula (no derivation) – Noise pollution – Doppler effect – applications. Reflection - Refraction – laws of reflection and refraction – refractive index of a medium – Total internal reflection – fiber optics –applications – Laser – Principle – applications – point lasers – remote sensing – RADAR – principle and applications – Sensors – Basics – various types – applications – Optoelectronic devices		6
Experiment #1: Determination of Refractive index of the glass plate using pin & paper **Experiment #2**:.Determination of Refractive index of water using travelling microscope **Experiment #3**: Determination of frequency of tuning fork - Sonometer		9
Unit II	**BASICS OF ELECTRICITY AND MAGNETISM**	
Current- Voltage - Ohm's law – resistance – resistivity - effective resistance - Kirchhoff current and voltage law - Internal resistance of the cell - Joule's law of heating – applications of heating effect of electric current Faraday law of electromagnetic induction – Inductor – self & mutual Inductance - applications – bar magnets - Pole strength – Magnetic moment –intensity of magnetization – magnetic field - types of magnetic materials and applications		6
Experiment #4: Verification of laws of resistances – Ohm's law **Experiment #5**: Determination of internal resistance of the cell - potentiometer **Experiment #6**: Determination of specific heat capacity of liquid - Joule's calorimeter. **Experiment #7**: Draw the V-I characteristics of solar cell and find the efficiency **Experiment #8:** Comparison of magnetic moments of two small bar magnets - deflection magnetometer in Tan A position by equal distance method		15
Test & Assessment		9
TOTAL HOURS		**45**

Suggested List of Students Activities:

Other than classroom learning, the following are the suggested student related co-curricular activities which can be undertaken to accelerate the attainment of the various outcomes in this course.

- Presentation/Seminars by students on any recent technological developments based on the course
- Periodic class quizzes conducted on a weekly/fortnightly based on the course
- Micro project that shall be an extension of any practical lab exercise to real-world application

References:

1. XIth and XIIth standard Tamilnadu State Board Physics Text Book, 2023 edition, Textbook Corporation Tamil Nadu
2. H.C.Verma, Concepts of Physics Vol 1 & Vol 2, Bharathi Bhavan Publishers, 1st edition, 2021

Web-based/Online Resources:

1. https://www.youtube.com/watch?v=nVPrWz8Jfgo&list=PLqwfRVlgGdFBVn3o5AmfJGhSv9NXM_XKc&ab_channel=khanacademymedicine
2. https://www.youtube.com/watch?v=ZcZQsj6YAgU&list=PLqwfRVlgGdFBHGEZdkmGzKGufuV5I3z0v&ab_channel=KhanAcademyPhysics
3. https://www.youtube.com/watch?v=F_vLWkkOETI&list=PLqwfRVlgGdFC7HLoajCVjUk23cqy4QvRL&ab_channel=KhanAcademy

Allocation of marks in End semester practical and model practical exams:

S.No	Description	Marks
1	Aim	5
2	Apparatus required	5
3	Formulas, explanations, tabular column, Schematic diagram	10
4	Observations & Reading taken	50
5	Calculations	20
6	Result	5
7	Viva voce	5
	Total	100

Allocation of marks in CA 1 & CA2 practical exams:

S.No	Description	Marks
1	Aim	2
2	Apparatus required	2
3	Formulas, explanations, tabular column, Schematic diagram	6
4	Observations & Reading taken	25
5	Calculations	10
6	Result	5
7	Observation note book	10
	Total	60

Allocation of marks in CA 1 & CA 2 theory exams:

Part A: 7 questions: 5 questions have to be answered, 5 X 2 = 10 marks

Part B: 3 questions: 2 questions have to answered, 2 X 5 = 10 marks

----

Total 20 marks

CH232451	APPLIED CHEMISTRY – I [NON-CIRCUIT BRANCHES]	L	T	P	C
Practicum		1	0	2	2

Introduction
This course will give the outline of applications of some important physics and chemistry principles which are relevant for non-circuit polytechnic branches

Course Objectives
The objective of this course is

1. To acquire skill on water quality parameter and art of water monitoring.
2. To understand basic knowledge on soft and hard water -EDTA experiment and scale formation.
3. To understand the harmful effects of heavy metal ions effluents and their health hazards.
4. To build understanding on methods of softening hard water- Ion exchange and reverse osmosis method and purification of drinking water.

Course Outcomes

After successful completion of this course, the students should be able to

CO1: Differentiate hard and soft water and estimate the total hardness in the given sample
CO2: Adopt suitable cost-effective methods for the softening of hard water
CO3: Identify the reason s for the hardness and check the standard of water quality parameters
CO4: Design a suitable model to address the disadvantage boiler scales

Pre-requisites

10th standard chemistry

CO/PO Mapping

CO / PO	PO1	PO2	PO3	PO4	PO5	PO6	PO7
CO1	3	3	2	1	1	1	3
CO2	3	3	2	1	1	1	3
CO3	3	3	2	1	1	1	3
CO4	3	3	2	1	1	1	3

CO5	3	3	2	1	1	1	3

Legend: 3-High Correlation, 2-Medium Correlation, 1-Low Correlation

Instructional Strategy

- It is advised that teachers take steps to pique pupils' attention and boost their learning confidence.
- To help students learn and appreciate numerous concepts and principles in each area, teachers should provide examples from daily life, realistic situations, and real-world engineering and technological applications.
- The demonstration can make the subject exciting and foster in the students a scientific mindset. Student activities should be planned on all the topics.
- Throughout the course, a theory-demonstrate-practice-activity strategy may be used to ensure that learning is outcome- and employability-based.
- Do not let students work on an activity or an experiment with the expected outcome, rather allow students to be honest about whatever the results of the experiment are. If the results are different from the expectations, students should do an analysis where they could be the source of error, if any.

Assessment Methodology

	Continuous Assessment (40 marks)					End Semester Examination (60 marks)
	CA1		CA2		CA3	
Mode	Written exam Unit 1	Practical exam 4 expts	Written exam Unit 2	Practical exam 4 expts	Model Practical exam	Practical exam
					8 expts	8 expts
Duration	1hour	2 hours	1 hour	2 hours	3 hours	3 hours
Exam Marks	20	60	20	60	100	100
Converted to	20		20		20	60
Final marks	20				20	60

Note:

- Average of CA 1 and CA 2 should be considered for the internal assessment of 20 marks
- CA 3 Model examination should be conducted as per the End Semester guidelines. The same should be considered for the internal assessment of 20 marks

CH232451	APPLIED CHEMISTRY – I [NON-CIRCUIT BRANCHES]	L	T	P	C
Practicum		1	0	2	2

Unit I	WATER ANALYSIS
Sources of water – depletion of underground water – Reasons – Basic Idea of rain water harvesting - Hard water and soft water – Hardness of water – Carbonate and Non–carbonate hardness – Methods of expressing hardness – mg/lit and ppm – Estimation of total hardness by EDTA method –simple Problems on total hardness only-Disadvantages of using hard water in boilers –Scale formation, Corrosion of boiler metal, Caustic Embrittlement – Priming and Foaming (definition only).	6 periods
Experiment #1: Estimation of total hardness of water by EDTA method **Experiment #2**: Determination of alkalinity of sample of hard water **Experiment #3**: Estimation of residual chlorine in a given water sample **Experiment #4**: Estimation of oxalic acid by permangnometry	12 periods
Unit II	**WATER TREATMENT**
Determination of residual chlorine in the given sample of hard water- identification of sulphate and chloride ions- identification of heavy metal ions in the given sample of effluent- Softening of hard water – Ion-Exchange method and Reverse Osmosis method – chemical methods of purification of water- Municipal supply – purification of drinking water – Calculation of pH, H^+ ions and TDS of different samples of acid and base – Quality of portable water (WHO Standard)	6 periods
Experiment #5: Calculation of pH, H^+ ion and TDS of different samples of acid and bases **Experiment #6**: Estimation of copper by Complexometry **Experiment #7**: Effluent analysis of heavy metal ions - lead, copper & zinc **Experiment #8**: Analysis of acid radicals such as carbonate, nitrate and sulphate ions.	12 periods
Test & Assessment	9 periods
TOTAL PERIODS	**45**

Suggested List of Students Activity

- Presentation/Seminars by students on any recent technological developments based on the course
- Periodic class quizzes conducted on a weekly/fortnightly based on the course
- Micro project that shall be an extension of any practical lab exercise to real-world application

Reference

1. XIth and XIIth standard Tamilnadu State Board Chemistry Text Book, 2023 edition, Textbook Corporation Tamil Nadu
2. Essentials of Physical Chemistry, Bahl & Tuli, 28th edition, S.Chand Publishing House.
3. A textbook of Engineering Chemistry, Dr.Sunita Rattan, 2020 reprint, S.K.Kataria&Sons
4. Textbook of Physical Chemistry, P.L Soni,O.P.Dharmarha & U.N.Dash,2022 edition, S.Chand Publishing House.

Web-based/Online Resources

1. https://libguides.lib.msu.edu/chemistry/teachonline
2. https://www.khanacademy.org/science/chemistry
3. https://phet.colorado.edu/
4. https://www.sciencebysimulation.com/chemreax/Faq.aspx
5. www.olabs.gov.in

Allocation of marks in End semester practical exam – and model practical exam

- **For experiment no. 1,2,3,4 and 6**

S.No	Description	Marks
1	Short procedure	5
2	Titration I	35
3	Titration II	35
4	Calculation	15
5	Result & Viva	10
	Total	100

Skill value

- Less than 2 % with correct tabular column and details - 35 marks
- More than 3%. - 10 marks
- More than 4% - 5 marks
- Wrong tabular column even if reading is correct - only 5 marks

- **For experiment no. 5**

Description	
Definition of pH and formula	10
Water quality parameters	15

pH reading for 3 samples	10
Calculation of hydrogen ion concentration	30
TDS reading for 3 samples	20
Calculation and Result	15
Total	100

- **For experiment no.7 Effluent analysis**

Description	
Definition	5
Any three test for 3 effluents	45
Any five sources for each effluent	20
Any five Harmful effects for each	20
Report	10
total	100

- **For experiment no.8 Analysis of acid radicals**

Description	
Identification of three acid radicals with two tests for each	60
Confirmatory test for each radical	30
Report	10
Total	100

<u>Allocation of marks in CA 1 and CA 2 practical exams</u>

- **For experiment no. 1,2 3,4 and 6**

S.No	Description	Marks
1	**Short procedure**	**5**

2	**Titration I**	**15**
3	**Titration II**	**15**
4	**Calculation**	**10**
5	**Result**	**5**
6	**Observation note book**	**10**
	total	**60**

Skill value

- Less than 2 % with correct tabular column and details - 15 marks
- More than 3%. - 10 marks
- More than 4% - 5 marks
- Wrong tabular column even if reading is correct - only 5 marks

➢ **For experiment no. 5**

External Examination	
Definition of pH and formula	5
Water quality parameters	10
pH reading for 3 samples	5
Calculation of hydrogen ion concentration	20
TDS reading for 3 samples	5
Calculation and Result	5
Observation note book	10
Total	60

➢ **For experiment no.7 Effluent analysis**

External Examination	
Definition	5

Any three test for 3 effluent	20
Any five sources for each effluent	10
Any five Harmful effects for each	10
Report	5
Observation note book	10
Total	60

- **For experiment no.8 Analysis of acid radicals**

External Examination	
Identification of three acid radicals with two tests for each	25
Confirmatory test for each radical	20
Report	5
Observation notebook	10
Total	60

Allocation of marks in CA 1 & CA 2 theory exams:

Part A: 7 questions: 5 questions have to be answered, 5 X 2 = 10 marks
Part B: 3 questions: 2 questions have to answered, 2 X 5 = 10 marks

---

Total 20 marks

CH232452	APPLIED CHEMISTRY – II (CIRCUIT BRANCHES)	L	T	P	C
Practicum		1	0	2	2

Introduction
This course will give the outline of applications of some important physics and chemistry principles which are relevant for non-circuit polytechnic branches

Course Objectives
The objective of this course is to

- Analyze soft and hard water, EDTA titrations on hardness of water and boiler scale formation.
- To empower the leaner with the fundamental knowledge on components of battery and working.
- To understand the process of electroplating and appreciate the role of electroplating in daily life.
- To build understanding on methods of softening hard water- Ion exchange and reverse osmosis method and drinking water quality parameters (WHO).

Course Outcomes
On successful completion of this course, the student will be able to

CO1: Differentiate hard water and soft water and reason out the salts responsible for hardness
CO2: Compare the hardness of water samples in different regions
CO3: Identify and apply the methods for effective conversion of hard water into soft water
CO4: Construct the electroplating model and apply the concept in daily life situations

Pre-requisites
10th standard chemistry

CO/PO Mapping

CO / PO	PO1	PO2	PO3	PO4	PO5	PO6	PO7
CO1	3	3	2	1	1	1	3
CO2	3	3	2	1	1	1	3
CO3	3	3	2	1	1	1	3
CO4	3	3	2	1	1	1	3

Legend: 3-High Correlation, 2-Medium Correlation, 1-Low Correlation

Instructional Strategy

- It is advised that teachers take steps to pique pupils' attention and boost their learning confidence.

- To help students learn and appreciate numerous concepts and principles in each area, teachers should provide examples from daily life, realistic situations, and real-world engineering and technological applications.
- The demonstration can make the subject exciting and foster in the students a scientific mindset. Student activities should be planned on all the topics.
- Throughout the course, a theory-demonstrate-practice-activity strategy may be used to ensure that learning is outcome- and employability-based.
- Do not let students work on an activity or an experiment with the expected outcome, rather allow students to be honest about whatever the results of the experiment are. If the results are different from the expectations, students should do an analysis where they could be the source of error, if any.

Assessment Methodology

	Continuous Assessment (40 marks)					End Semester Examination (60 marks)
	CA1		CA2		CA3	
Mode	Written exam Unit 1	Practical exam 4 expts	Written exam Unit 2	Practical exam 4 expts	Model Practical exam	Practical exam
					8 expts	8 expts
Duration	1hour	2 hours	1 hour	2 hours	3 hours	3 hours
Exam Marks	20	60	20	60	100	100
Converted to	20		20		20	60
Final marks	20				20	60

Note:

- Average of CA 1 and CA 2 should be considered for the internal assessment of 20 marks
- CA 3 Model examination should be conducted as per the End Semester guidelines. The same should be considered for the internal assessment of 20 marks

CH232452	APPLIED CHEMISTRY – II (CIRCUIT BRANCHES)	L	T	P	C
Practicum		1	0	2	2

Unit I	WATER ANALYSIS AND TREATMENT	
Sources of water – depletion of underground water – Reasons - Hard water and soft water – Hardness of water – Carbonate and Non–carbonate hardness – Methods of expressing hardness – mg/lit and ppm – Estimation of total hardness by EDTA method –simple Problems on total hardness only -- identification of sulphate and chloride ions- identification of heavy metal ions in the given sample of effluent- Softening of hard water – Ion-Exchange method and Reverse Osmosis-Calculation of pH, H^+ ion and TDS of different samples of acid and base		6
Experiment #1: Estimation of total hardness of water by EDTA method **Experiment #2:** Determination of alkalinity of sample of hard water **Experiment #3**: Estimation of residual chlorine in a given water sample **Experiment #4**: Estimation of copper by Complexometry		12
Unit II	**BATTERIES AND CELLS**	
Metallic and electrolytic conduction –differences- Faradays laws of electrolysis- electronic concept of oxidation and reduction - electroplating- definition- examples-chrome plating, copper plating and galvanization-Energy sources – Primary and secondary battery-electrochemical cell – construction and working of dry cell – lead acid battery - advantages construction and working of solar cell.		6
Experiment #5: Calculation of pH, H^+ ion and TDS of different samples of acids and bases. **Experiment #6:** Effluent analysis of heavy metal ions - lead, copper & zinc **Experiment #7**: Process of electroplating – copper plating by Joules calorimeter **Experiment #8:** Analysis of acid radicals such as carbonate, nitrate and sulphate ions.		12
Test & Revision		9
TOTAL HOURS		**45**

Suggested List of Students Activities:
Other than classroom learning, the following are the suggested student related co-curricular activities which can be undertaken to accelerate the attainment of the various outcomes in this course.

- Presentation/Seminars by students on any recent technological developments based on the course
- Periodic class quizzes conducted on a weekly/fortnightly based on the course
- Micro project that shall be an extension of any practical lab exercise to real-world application

References:

1. XIth and XIIth standard Tamilnadu Chemistry Text Book, 2023 edition, Textbook

Corporation Tamil Nadu
2. Essentials of Physical Chemistry, Bahl & Tuli, 28th edition, S.Chand Publishing House.
3. A textbook of Engineering Chemistry, Dr.Sunita Rattan, 2020 reprint, S.K.Kataria&Sons
4. Textbook of Physical Chemistry, P.L Soni,O.P.Dharmarha & U.N.Dash,2022 edition, S.Chand Publishing House.

Web-based/Online Resources:

1. https://libguides.lib.msu.edu/chemistry/teachonline
2. https://www.khanacademy.org/science/chemistry
3. https://phet.colorado.edu/
4. https://www.sciencebysimulation.com/chemreax/Faq.aspx
5. www.olabs.gov.in

Allocation of marks in End semester practical exam – and Model exam

- **For experiment no. 1,2,3,4,**

S.No	Description	Marks
1	Short procedure	5
2	Titration I	35
3	Titration II	35
4	Calculation	15
5	Result & Viva	10
	Total	100

Skill value

- Less than 2 % with correct tabular column and details - 35 marks
- More than 3%. - 10 marks
- More than 4% - 5 marks
- Wrong tabular column even if reading is correct - only 5 marks

- **For experiment no. 5**

Description	
Definition of pH and formula	10
Water quality parameters	15
pH reading for 3 samples	10
Calculation of hydrogen ion concentration	30
TDS reading for 3 samples	20

Calculation and Result	15
Total	100

- **For experiment no.6 Effluent analysis**

Description	
Definition	5
Any three test for 3 effluent	45
Any five sources for each effluent	20
Any five Harmful effects for each	20
Report	10
Total	100

- **For experiment no. 7 for circuit branches (Electroplating)**

Description	
Electroplating- definition of chromplating, copper plating and galvanization	15
Apparatus required	5
Anode cathode and electrolyte	10
Circuit diagram	20
Cell reaction at anode	20
Cell reaction at cathode	20
Report	10
Total	100

- **For experiment no.8 Analysis of acid radicals**

Description	
Identification of three acid radicals with two test for each	60
Confirmatory test for each radicals	30
Report	10

Total	100

<u>Allocation of marks for CA 1 and CA 2 practical exams only</u>

- **For experiment no. 1,2,3,4,**

S.No	Description	Marks
1	**Short procedure**	**5**
2	**Titration I**	**15**
3	**Titration II**	**15**
4	**Calculation**	**10**
5	**Result**	**5**
6	**Observation note book**	**10**
	Total	**60**

Skill value

- Less than 2 % with correct tabular column and details - 15 marks
- More than 3%. - 10 marks
- More than 4% - 5 marks
- Wrong tabular column even if reading is correct - only 5 marks

- **For experiment no. 5**

Description	
Definition of pH and formula	5
Water quality parameters	10
pH reading for 3 samples	5
Calculation of hydrogen ion concentration	20
TDS reading for 3 samples	5
Calculation and Result	5
Observation notebook	10
Total	60

- **For experiment no.6 Effluent analysis**

Description	
Definition	5
Any three test for 3 effluent	20
Any five sources for each effluent	10
Any five Harmful effects for each	10
Report	5
Observation notebook	10
Total	60

- **For experiment no. 7 for circuit branches (Electroplating)**

Description	
Electroplating- definition of chromplating, copper plating and galvanization	3
Apparatus required	2
Anode cathode and electrolyte	5
Circuit diagram	15
Cell reaction at anode	10
Cell reaction at cathode	10
Report	5
Observation note book	10
Total	60

- **For experiment no.8 Analysis of acid radicals**

Description	
Identification of three acid radicals with two test for each	20
Confirmatory test for each radicals	20
Report	10

Observation notebook	10
Total	60

Allocation of marks in CA 1 & CA 2 theory exams:

Part A: 7 questions: 5 questions have to be answered, 5 X 2 = 10 marks
Part B: 3 questions: 2 questions have to answered, 2 X 5 = 10 marks

---

Total 20 marks

TA232110	தமிழரும் தொழில்நுட்பமும் (Tamils and Technology)	L	T	P	C
Theory		2	-	-	2

Introduction:
This course provides an opportunity for students who have Tamil as their mother tongue and for students from other states to have multifold outcomes. Learning in the mother tongue is a key factor for inclusion and quality learning, and it also improves learning outcomes and academic performance. This is crucial, for appreciation of Tamil as a language and as a culture. It fosters mutual understanding and respect for one another and helps preserve the wealth of cultural and traditional heritage that is embedded in Tamil language around the world.

Course Objectives: The objective of this course is to enable the student to

1. Appreciate weaving and ceramic technology
2. Learn the design and construction technology of ancient times
3. understand the engineering principles of manufacturing technology
4. introduce the methods of irrigation and agricultural technology
5. learn the scientific tamil and tamil computing

Course Outcomes:
After successful completion of this course, the students should be able to

CO1: explain the principles behind weaving and ceramic technology of ancient tamils
CO2: correlate the present and ancient design and construction technology
CO3: apply engineering principles to ancient manufacturing technology
CO4: apply engineering principles to irrigation and agricultural technology
CO5: develop scientific tamil and new techniques in tamil computing

Assessment Methodology

	Continuous Assessment (40 marks)				End Semester Examination (60 marks)
	CA1	CA2	CA3	CA4	
Mode	Written Test (unit 1 & 2)	Written Test (unit 3 & 4)	Quiz / MCQ	Model Examination	Written Examination

Duration	2 hours	2 hours	1 hour	3 hours	3 hours
Exam Marks	60	60	40	100	100
Converted to	20	20	10	10	60
Marks	40				60

Note:

- CA1 and CA2 Assessment test should be conducted. Best of one will be considered for the internal assessment of 20 Marks.
- CA3 Online quiz examination (MCQ) should be conducted covering the complete syllabus. The marks should be converted to 10 marks for the internal assessment
- CA4 Model examination should be conducted as per the end semester question pattern. The marks should be converted to 10 marks for the internal assessment.

TA232110	தமிழரும் தொழில்நுட்பமும் **(Tamils and Technology)**	L	T	P	C
Theory		2	-	-	2

Unit I	**WEAVING AND CERMAMIC TECHNOLOGY**	
Weaving Industry during Sangam Age – Ceramic technology – Black and Red Ware Potteries (BRW) – Graffiti on Potteries.		
Unit II	**DESIGN AND CONSTRUCTION TECHNOLOGY**	
Designing and Structural construction House & Designs in household materials during Sangam Age - Building materials and Hero stones of Sangam age – Details of Stage Constructions in Silappathikaram - Sculptures and Temples of Mamallapuram - Great Temples of Cholas and other worship places - Temples of Nayaka Period - Type study (Madurai Meenakshi Temple)- Thirumalai Nayakar Mahal - Chetti Nadu Houses, Indo - Saracenic architecture at Madras during British Period.		8 periods
Unit III	**MANUFACTURING TECHNOLOGY**	
Art of Ship Building - Metallurgical studies - Iron industry - Iron smelting, steel -Copper and gold coins as source of history - Minting of Coins – Beads making-industries Stone beads -Glass beads - Terracotta beads -Shell beads/ bone beats - Archeological evidences - Gem stone types described in Silappathikaram.		7 periods
Unit IV	**AGRICULTURE AND IRRIGATION TECHNOLOGY**	

Dam, Tank, ponds, Sluice, Significance of Kumizhi Thoompu of Chola Period, Animal Husbandry - Wells designed for cattle use - Agriculture and Agro Processing - Knowledge of Sea - Fisheries – Pearl - Conche diving - Ancient Knowledge of Ocean - Knowledge Specific Society.		periods
Unit V	**SCIENTIFIC TAMIL AND TAMIL COMPUTING**	
Development of Scientific Tamil - Tamil computing – Digitalization of Tamil Books – Development of Tamil Software – Tamil Virtual Academy – Tamil Digital Library – Online Tamil Dictionaries – Sorkuvai Project		
TOTAL PERIODS		**90**

TA232110	தமிழரும் தொழில்நுட்பமும் (Tamils and Technology)	L	T	P	C
Theory		2	-	-	2

அலகு I	**நெசவு மற்றும் பானைத்தொழில்நுட்பம்**	
சங்க காலத்தில் நெசவுத்தொழில்- பானைத்தொழில் நுட்பம் – கருப்பு சிவப்பு பாண்டங்கள் – பாண்டங்களில் கீறல் குறியீடுகள்		5 periods
Unit II	**வடிவமைப்பு மற்றும் கட்டிடத் தொழில்நுட்பம்**	
சங்க காலத்தில் வடிவமைப்பு மற்றும் கட்டுமானங்கள் வடிவமைப்பு மற்றும் கட்டிடத் தொழில்நுட்பம் சங்க காலத்தில் வடிவமைப்பு மற்றும் கட்டுமானங்கள் & சங்க காலத்தில் வீட்டுப் பொருட்களில் வடிவமைப்பு – சங்க காலத்தில் கட்டுமான பொருட்களும் நடுகல்லும் - சிலப்பதிகாரத்தில் மேடை அமைப்பு பற்றிய விவரங்கள் – மாமல்லபுரச் சிற்பங்களும், கோவில்களும் – சோழர் காலத்துப் பெருங்கோயில்கள் மற்றும் விற வழிபாட்டுத் தலங்கள் – நாயக்கர் காலக் கோயில்கள் – மாதிரி கட்டமைப்புகள் பற்றி அறிதல், மதுரை மீனாட்சி அம்மன் ஆலயம் மற்றும் திருமலை நாயக்கர் மஹால் – செட்டிநாட்டு வீடுகள் – பிரிட்டிஷ் காலத்தில் சென்னையில் இந்தோ-சாரோசெனிக் கட்டிடக் கலை.		7 periods
Unit III	**உற்பத்தி தொழில்நுட்பம்**	
கப்பல் கட்டும் கலை – உலோகவியல் – இரும்பு தொழிற்சாலை – இரும்பை உருக்குதல், எஃகு – வரலாற்றுச் சான்றுகளாக செம்பு மற்றும் தங்க நாணயங்கள் – நாணயங்கள் அச்சடித்தல் – மணி உருவாக்கும் தொழிற்சாலைகள் – கல்மணிகள், கண்ணாடி மணிகள் – சுடுமண் மணிகள் – சங்கு மணிகள் – எலும்புத் துண்டுகள் – தொல்லியல் சான்றுகள் – சிலப்பதிகாரத்தில் மணிகளின் வகைகள்.		6 periods
Unit IV	**வேளாண்மை மற்றும் நீர்ப்பாசனத் தொழில்நுட்பம்**	
அணை, ஏரி, குளங்கள், மதகு – சோழர் காலக் குமுழித் தூம்பின் முக்கியத்துவம் – கால்நடை பராமரிப்பு – காலநடைகளுக்காக வடிவமைக்கப்பட்ட கிணறுகள் – வேளாண்மை மற்றும் வேளாண்மைச் சார்ந்த செயல்பாடுகள் – கடல்சார் அறிவு –		6 periods

மீன்வளம் – முத்து மற்றும் முத்துக்குளித்தல் – பெருங்கடல் குறித்த பண்டைய அறிவு – அறிவுசார் சமூகம்.		
Unit V	**அறிவியல் தமிழ் மற்றும் கணித்தமிழ்**	
அறிவியல் தமிழின் வளர்ச்சி – கணித்தமிழ் வளர்ச்சி – தமிழ் நூல்கள் மின்பதிப்பு செய்தல் – தமிழ் மென்பொருட்கள் உருவாக்கம் – தமிழ் இணையக் கல்விக்கழகம் – தமிழ் மின் நூலகம் – இணையத்தில் தமிழ் அகராதிகள் – சொற்குவைத்திட்டம்		6 periods
TOTAL PERIODS		**30**

Reference

1. தமிழக வரலாறு – மக்களும் பண்பாடும் – கே.கே.பிள்ளை (வெளியீடுதமிழக வரலாறு – மக்களும் பண்பாடும் – கே.கே.பிள்ளை (வெளியீடு: தமிழ்நாடு பாடநூல் மற்றும் கல்வியியல் பணிகள் கழகம்)
2. கணினித் தமிழ் – முனைவர் இல.சுந்தரம் (விகடன் பிரசுரம்)
3. கீழடி – வைகை நதிக்கரையில் சங்ககால நகர நாகரிகம் (தொல்லியல் துறை வெளியீடு)
4. பொருநை – ஆற்றங்கரை நாகரிகம் (தொல்லியல் துறை வெளியீடு)
5. Social Life of Tamils (Dr.K.K.Pillay) A joint publication of TNTB & ESC and RMRL –
(in print)
6. Social Life of the Tamils - The Classical Period (Dr.S.Singaravelu) (Published by: International Institute of Tamil Studies.
7. Historical Heritage of the Tamils (Dr.S.V.Subatamanian, Dr.K.D. Thirunavukkarasu)
(Published by: International Institute of Tamil Studies).
8. The Contributions of the Tamils to Indian Culture (Dr.M.Valarmathi) (Published by: International Institute of Tamil Studies.)
8. Keeladi - ‘Sangam City C ivilization on the banks of river Vaigai’ (Jointly Published by Department of Archaeology & Tamil Nadu Text Book and Educational Services

Corporation, Tamil Nadu)

9. Studies in the History of India with Special Reference to Tamil Nadu (Dr.K.K.Pillay) (Published by: The Author)
10. Porunai Civilization (Jointly Published by: Department of Archaeology & Tamil Nadu Text Book and Educational Services Corporation, Tamil Nadu)
11. Journey of Civilization Indus to Vaigai (R.Balakrishnan) (Published by: Roja Muthiah Research Library)

EN232480	COMMUNICATIVE ENGLISH - II	L	T	P	C
Practicum		1	0	2	2

Introduction

Communication is the foundation for all human relationships and language is one of the prime tools of communication. Communication is reliant on cognitive skills such as eloquent speech, vocabulary, reading comprehension and critical thinking. The present syllabus focuses on four Language Skills Listening, Speaking, Reading, and Writing. It enables the students to shed their inhibitions be confident in their approach and acquire the skills to build good working relationships in their career. It helps the student at the Diploma level to gain confidence and enhance them to face their career commitments with globalized standards.

Course Objectives

The objective of this course is to enable the students to

- Improve the communicative competence in English.
- Enhance the vocabulary and LSRW Skills.
- Foster their confidence in group communication skills.
- Learn the techniques of effective writing.
- Enable them to communicate effectively and appropriately in real-life situations.

Course Outcomes

On successful completion of this course, the students will be able to

CO1: Boost confidence in expressing ideas, and plans, interpreting the same in social and professional situations.

CO2: Frame grammatically correct sentences with clarity and coherence both in oral and written communication.

CO3: Analyze and evaluate the information with supporting ideas logically and coherently.

CO4: Communicate effectively using appropriate vocabulary and grammar in every situational context.
CO5: Provide adequate exposure and opportunities to imbibe, develop, practice and use LSRW skills and seek opportunities for further language development outside the classroom.

Pre-requisites

NIL

CO/PO Mapping

CO / PO	PO1	PO2	PO3	PO4	PO5	PO6	PO7
CO1	-	-	-	-	-	3	2
CO2	-	-	-	-	-	3	2
CO3	-	-	-	-	-	3	2
CO4	-	-	-	-	-	3	2
CO5	-	-	-	-	-	3	2

Legend: 3-High Correlation, 2-Medium Correlation, 1-Low Correlation

Instructional Strategy

The instructional strategy for Communicative English classes employs a learner-centred and communicative approach that focuses on active student participation and engagement. Here are some key strategies to be followed.

- **Communicative Activities:** Activities that develop active vocabulary and encourage role plays and language games for everyday applications.
- **Pair and Group work:** Promotes student interaction in a confident way in day-to-day conversation. It also reinforces their language skills through communication with their peers.
- **Authentic Materials:** News articles, videos, and podcasts develop comprehension and critical thinking skills.
- **Task-Based Learning:** Implement task-based learning activities for students and use English for real-world purposes.
- **Language Output and Output Balance:** Ensure a balance between language input like exposure to domain-specific vocabulary and grammar structures with examples. Enable language output by giving opportunities for students to build both receptive skills **(Listening and Reading)** and productive skills **(Speaking and Writing).**

- **Use of Technology:** Technology tools and resources such as language learning apps, online platforms, and virtual communication tools can be used to provide practice opportunities.
- **Regular Assessment:** Formative and Summative assessments are conducted to gauge students' progress and encourage them in their language learning journey

	Continuous Assessment (40 marks)				End Semester Examination (60 marks)	
	CA1	**CA2**	**CA3**	**CA4**		
Mode	**Written Test** (Theory + Writing Skill) UNIT I & II	**Written Test** (Theory + Writing Skill) UNIT III, IV&V	**MODEL EXAM** Oral (S, R)* (Unit I, II, III, IV&V)	**MODEL EXAM** Written (Theory, L, W)* (Unit I, II,III, IV,V)	**Oral Exam** **(S,R)***	**Written Exam** **(Theory L,W)***
Duration	2 hours	2 hours	2 hours	2 hours	3 hours	
Exam Marks	30 +10 (Record Marks -Unit I & II)	30 +10 (Record Marks- Unit III, IV, V)	50	50	50	50
Converted to	20	20	20	20	60	
Marks	**Best of CA1 & CA2 Marks(20)**		**Average of CA3 & CA4 (Marks 20)**		**60**	

Assessment Methodology

***L- Listening Skill S – Speaking Skill R – Reading Skill W – Writing Skill.**

Note:

- **CA 1** - 30 Marks [Written Exam from Unit I & II].
- **CA 2** - 30 Marks [Written Exam from Unit III, IV & V].
- **Marks for Record writing for each exercise is 10 Marks.**
- **CA 3** -**Model Exam** (Unit I, II, III, IV & V) – Speaking Skills and Reading Skills.
- **CA 4** -**Model Exam** (Unit I, II, III, IV & V) – Theory, Listening Skills and Writing Skills.
- **End Semester Examination: Oral** (Speaking and Reading Skills)

Written (Theory, Listening Skills and Writing Skills)

- **Selected lists will be provided in the e-Text Book wherever mentioned.**

EN232370	Communicative English – II	L	T	P	C
Practicum		1	0	2	2

Unit I	SITUATIONAL ENGLISH	
Theory: (Prose) Science Fiction Story **[Any Short Story with Technical Words]** **Focus on:** a) Technical words **[Textual]** b) Conversions – Nouns, Verbs, Adjectives and Adverbs using affixes **[Textual]**		3+6
PRACTICAL: [Lab/Activity] **Exercise: 1** **Listening:** a) Listening to Scientific and Technological Passages. **[Minimum 3 passages]** **[Conversions - nouns, verbs, adjectives, and adverbs using affixes]** **[Minimum 5 conversions from each of the 3 passages]** b) One Word Substitution **[Technical]** **[Minimum 5 words from each passage]** **(To be recorded in the Record Notebook)**		
Speaking: **a)** Process Description – **[Making of working models and Lab procedures]** **b)** Situational dialogues **[WH, Yes or No]**		
Reading: Short Passages Based on Professional Ethics		
Writing: **a)** Rules for email etiquette **b)** Email writing – **[Business Letters and Job Applications]**		
Unit II	**FUNCTIONAL ENGLISH**	

Theory: **(Poem)** 'The Bangle Sellers' by Sarojini Naidu **Focus on:** **a)** Comparison of Adjectives **[Textual]** **b)** Fill in the blanks with suitable forms of adjectives.**[General]**	
Listening: Listening to Lyrical Poems and noting down the Descriptive Adjectives.	
PRACTICAL: [Lab/Activity] **Exercise: 2** **Speaking:** **a)** Word Cloud **[Minimum 3 word clouds]** **[Frame 5 sentences from each Word Cloud]** **[Minimum 5 words]** **b)** Homophones and their meanings **[General]** **[A selected list of 25 homophones will be provided]** **[To be recorded in the Record Notebook]**	3+6
Reading: **a)** Reading Comprehension **[News Articles]** **[Questions and Answers, Synonyms/ Antonyms, Completing the sentence]** **b)** Newspaper Reading Practice is to be given.	
Writing: **a)** Collocations of Technical Words **[Match the Collocations]** **[A selected list of 25 Collocations will be provided]** **b)** Punctuations **[Sentences and Passages]**	
Unit III	**EXPRESSIVE ENGLISH**
Theory: **(Prose)** Narrative Essay – 'On Saying Please' by A.G. Gardiner **Focus on:** Reporting Dialogues **[Textual/General]** **[Change into Reported Speech]**	3+6

Listening: Listen to Scientific Passages **[Questions and Answers]**	
Speaking: **a)** Facing an Interview Preparations **[Checklist]** Body Language **[Tips]** **b)** Mock Interviews **[Practical Model to be given]**	
PRACTICAL: (Lab/Activity) **Exercise: 3** **Reading:** Reading Idiomatic Expressions with their meanings. **[Matching the idioms with their meanings]** **[5 Idioms in each set]** **[A selected list of 25 idioms with their meanings will be provided]** **[To be recorded in the Record Notebook]**	
Writing: Info graphics/Picture Reading **[General/Technical]** **[Comprehending it as a Paragraph]**	
Unit IV	**EFFECTIVE ENGLISH**
Theory: (Prose) General Prose Passage - **[Speech by a famous Indian Personality]** **Focus on:** Identification of Types of Sentences **Four Types – Assertive, Interrogative, Imperative and Exclamatory]** **[Textual/General]**	3+6
Listening:	

Speeches of Great Personalities **[Note-Taking]**	
Speaking: Group Discussion **[General Topics – Environmental and Creating Awareness]**	
Reading: Reading various types of sentences with intonation **[Falling Tone and Rising Tone]**	
PRACTICAL: (Lab/Activity) **Exercise: 4** **Writing:** Advertisement Writing **[Classifieds – Educational, Rental, Real Estate, Automotive, Business Offers] [Minimum one from each classified]** **[To be recorded in the Record Notebook]**	
Unit V	**CREATIVE ENGLISH**
Theory: Passages on Motivational Topics **Focus on:** **a)** Phrasal Verbs **[Textual]** **b)** Framing sentences using Phrasal Verbs **[General]** **[A selected list of 25 Phrasal Verbs will be provided]**	
Listening: Listening to the Weather Reports **[Fill up the information gaps]**	3+6
PRACTICAL: (Lab/Activity) **Exercise: 5** **Speaking:**	

Describing Oneself – **[Physical Features, Character Traits, Likes and Dislikes]** **[Describe in points under each aspect]** **[To be recorded in the Record Notebook]**	
Reading: Interpreting Graphics into Verbal **[Pie chart/Bar Diagram/Flow chart]**	
Writing: **a)** Completing a story **b)** Caption Writing for News Reports	
TOTAL HOURS	**45**

INCORPORATE SOME OF THESE DAILY ACTIVITIES IN THE LANGUAGE CLASS

1. New words and Meanings
2. Proverbs and its Meanings
3. Contextual Vocabulary
4. Frequently Mispronounced Words
5. Cross Word Puzzles (General/Technical)
6. Abbreviations (Social Media)
7. Newspaper Reading Practice

Suggested List of Student Activities:

- Presentation/Seminars by students on any recent technological developments based on the branch of study.
- Quizzes are to be conducted based on the course on a weekly/fortnightly basis.
- Role Plays to Practice Speaking and Listening Skills.
- Descriptive Presentations about a specific topic using appropriate vocabulary.
- Language Games like word puzzles, vocabulary quizzes, and interactive games.
- News Discussions to express their opinions on several topics.

- Collaborative writing promotes teamwork which improves writing skills.

References:

1. “Cambridge English Skills: Real Listening and Speaking” by Miles Craven
2. “Writing Better English for ESL Learners” by Ed Swick
3. “English Grammar in Use” by Raymond Murphy
4. Practical English Usage” by Michael Swan
5. “Oxford Basics – Simple Reading Activities” by Jill Hadfield. Charles Hadfield
6. “Oxford Basics – Simple Speaking Activities” by Jill Hadfield, Charles Hadfield

Web-based/Online Resources:

1. https://www.bbc.co.uk/learningenglish/
2. https://www.fluentu.com/
3. https://www.englishclub.com/

COMMUNICATIVE ENGLISH – II (PRACTICUM)

ASSESSMENT PATTERN

CONTINUOUS ASSESSMENT – I (TOTAL MARKS: 30)
Unit I & II (only Theory and Writing Skills)

I. Pick out any 5 technical words from the given passage. **(5x1=5)**
[Passage from Science Fiction Short Story – Textual]

II. Read the given poetry lines and answer the following questions**. (5x1=5)**
[Poem: 'The Bangle Sellers' – Sarojini Naidu (5 questions)

III. Match the technical words and form corresponding collocations. **(5x1=5)**
[5 words in one set]

IV. Correct the paragraph by adding appropriate punctuation and capitalization. **[2 small paragraphs]**
(2 x 2.5 = 5)

V. Convert the following words into their corresponding derivatives. **(5x1=5)**
[Textual/General – N/V/Adj/Adv]

VI. E-Mail Writing: Business/Job Applications **(1x5=5)**
[Under any one of the mentioned categories]

CONTINUOUS ASSESSMENT – II (TOTAL MARKS: 30)
Unit III, IV & V (only theory and Writing Skills)

I. Choose the correct answer. (Multiple Choice) **(5x1=5)**
[Prose: On Saying Please by A.G. Gardiner - 5 Questions]

II. Identify the types of sentences. **(5x1=5)**
[General/Textual –Affirmative, Interrogative (Wh-type and Yes or No type) Imperative and Exclamatory] [5 sentences]

III. Frame sentences using the given Phrasal Verbs. **(5x1=5)**
[General/Textual – 5 phrasal verbs]

IV. Write a paragraph of 50 words using the given info graphics/picture. (**1x5=5)**
[General/Technical]

V. Write classified advertisement – (Educational / Rental / Real Estate / Automotive / Business Offers)
(1x5=5)
[Under any one of the specified categories]

VI. Write suitable captions for the given news reports**:** **(2x2$^{1/2}$ =5**)
[2 news reports]

CONTINUOUS ASSESSMENT – III (TOTAL MARKS: 50)

ORAL EXAM - (Speaking Skills and Reading Skills)

TEST ON SPEAKING SKILLS (40 marks)

I. Describe the process of (Making working models / Lab procedures**)** **(1x10=10)**
(Under any one of the mentioned categories)

II. Describe oneself: (Physical features / Character traits / Likes and dislikes**)** **(1x10=10)**
(Under any one of the aspects)

III. Interpret the given Graphics into Verbal. (Pie chart / Bar Diagram / Flow chart)
(1x10=10)
(Under any one of the mentioned categories)

IV. Frame questions using WH and YES or NO type for the given situations. **(5x1=5)**
(5 situations to be given)

V. Frame sentences using any 5 words from the given Word cloud**.** **(5x1=5)**

TEST ON READING SKILLS (10 marks)

VI. Match the idiomatic expressions with their corresponding meanings**.** **(5x1=5)**
(5 idiomatic expressions in one set)

VII. Read the following sentences with proper intonation. **. (5x1=5)**
(5 sentences - under 4 types of sentences - Affirmative, Interrogative (Wh-type and Yes or No type) Imperative and Exclamatory] [Falling Tone and Rising Tone]

CONTINUOUS ASSESSMENT – IV (TOTAL MARKS: 50)

WRITTEN EXAM – (Theory, Listening and Writing Skills)

TEST ON THEORY PART (15 marks)

I. Read the given poetry lines and answer the following questions: **(5x1=5)**
[Poem: 'The Bangle Sellers' by Sarojini Naidu – 5 Questions with Poetry lines]

II. Answer the following short questions in one or two lines: **(5x2=10)**
[**(Prose: 'On Saying Please' by A.G. Gardiner – 5 Questions]**

TEST ON LISTENING SKILLS (5 marks)

III. Listen to weather reports and fill in the information gaps**. (2 x 2.5 = 5)**
[2 weather reports]

TEST ON WRITING SKILLS (30 marks)

IV. Fill in the blanks with suitable adjectives. **(5x1=5)**

[General - 5 fill-ups with options]

V. Change the following dialogue into reported speech: **(2 x 2.5 = 5)**

[General/Textual – 2 dialogues]

VI. E-Mail Writing – Business / Job Applications **(1x5=5)**
[Under any one of the mentioned categories]

VII. Write a paragraph of about 50 words using the given info graphics/picture.

(1x5=5)

VIII. Complete the story within 3 to 5 lines and give a title. **(1x5=5)**

IX. Match the technical words and form collocations. **(5x1=5)**
[5 words in one set]

BOARD EXAMINATION (PRACTICUM)

COMMUNICATIVE ENGLISH – II (TOTAL MARKS: 100)

(ORAL SKILLS: 50 MARKS + WRITTEN SKILLS: 50)

ORAL SKILLS (50 marks)

TEST ON SPEAKING SKILL (30 marks)

I. Describe oneself: (Physical features / Character traits / Likes and dislikes) **(1x10=10)**
(Under any one of the aspects)

II. a) Frame questions using **(WH / Yes or No)** for the given situations **:** **(5x1=5)**
(5 Situations to be given)

(Or) **(Or)**

b)Give the meaning for the set of homophones
($2x2^{1/2}$=5)
(2 homophones in one set)

III. Frame sentences using any 5 words in the word cloud**.** **(5x1=5)**

IV. Group Discussion: (Environmental / Creating Awareness) **(1x10=10)**
(Topics given according to the groups divided)

TEST ON READING SKILL (20 marks)

V. Interpret the given Graphics into Verbal. (Pie chart / Bar Diagram / Flow chart) **(1x10=10)**
(Under any of the mentioned categories)

VI. Match the idiomatic expressions with their corresponding meanings. **(5x1=5)**
(5 idiomatic expressions in one set)

VII. Read the following sentences with proper intonation. **. (5x1=5)**
(5 sentences - under 4 types of sentences - Affirmative, Interrogative (Wh-type and Yes or No type) Imperative and Exclamatory]

WRITTEN SKILLS (50 marks)

TEST ON THEORY PART (10 marks)

I. Read the poetry lines and answer the following questions**:** **(4x1=4)**
[Poem: 'The Bangle Sellers' by Sarojini Naidu – 4 Questions with Poetry lines]

II. Answer the following short questions in one or two lines: **(3x2=6)**
[(Prose: 'On Saying Please' by A.G. Gardiner – 3 Questions]

TEST ON LISTENING SKILLS (20 marks)

III. Listen to the speech of the **(great personality)** and take down notes. **(1x10 =10)**

IV. Listen to the (**scientific passage**) and answer the following questions:

(1x10=10)

TEST ON WRITING SKILLS (Any 4) (20 marks)

V. Fill in the blanks with suitable adjectives: **(1x5=5)**
[General – 5 fill-ups]

VI. Frame sentences using phrasal verbs**:** **(5x1=5)**
[5 phrasal verbs]

V. E-Mail Writing – Business / Job Applications **(1x5=5)**
[Under any one of the mentioned categories]

VI. Write a paragraph of about 50 words using the given info graphics/picture.

(1x5=5)

VII. Match the technical words and form collocations**.** **(5x1=5)**
[5 words in one set]

VIII. Write suitable captions for the news reports given: **(2x2.5=5)**
[2 news reports]

ME232120	BASICS OF MECHANICAL ENGINEERING	L	T	P	C
Theory		3	0	0	3

Introduction:

Fundamental knowledge in the field of Mechanical Engineering are essential for all engineers. They must thoroughly study the material properties, machine tools and its components before delving into advanced applications. This foundational subject is crucial for a comprehensive grasp of the principles. To develop the necessary psychomotor skills in this area, students should not only understand the concepts but also apply them effectively.

Course Objectives:

The objective of this course is to enable the student to

- Understand the essential knowledge and skills of basic Mechanical Engineering encountered in professional practice for diploma holders.
- Comprehend the fundamental concepts and scope of Mechanical Engineering.
- Describe the properties of materials and the variety of machine tools used in the industry.
- Examine the workings and applications of power transmission drives in mechanical systems.
- Identify the various types of engines and power plants to enhance the understanding of their operational efficiencies and energy conversions.

Course Outcomes:

On successful completion of this course, the student will be able to
CO1: Recognize the importance of Mechanical Engineering in industrial applications.
CO2: Classify the different types of materials used in metal forming and joining processes.
CO3: Illustrate the principles and industrial applications of lathe, drilling, and milling machines.
CO4: Acquire basic knowledge about power transmission through belt and gear drives.
CO5: Understand the basics of Internal Combustion (IC) Engines and the various types of power plants.

Pre-requisites:
Knowledge of basic Science

CO/PO Mapping

CO / PO	PO1	PO2	PO3	PO4	PO5	PO6	PO7
CO1	3	2	1	-	-	-	-
CO2	1	2	3	-	-	-	1
CO3	-	-	3	-	-		1
CO4	3	2	2	-	-	-	1
CO5	3	2	2	-	-	-	1

Legend: 3-High Correlation, 2-Medium Correlation, 1-Low Correlation

Instructional Strategy:

- Engage and Motivate: Instructors should actively engage students to boost their learning confidence.
- Real-World Relevance: Incorporate relatable, real-life examples and engineering applications to help students understand and appreciate course concepts.
- Interactive Learning: Utilize demonstrations and plan interactive student activities for an engaging learning experience.
- Application-Based Learning: Employ a theory-demonstrate-practice-activity strategy throughout the course to ensure outcome-driven learning and employability.
- Simulation and Real-World Practice: Conduct demonstrations and hands-on activities in a simulated environment, transitioning to real-world scenarios when possible.
- Encourage Critical Analysis: Foster an environment where students can honestly assess experiment outcomes and analyze potential sources of error in case of discrepancies

Assessment Methodology

	Continuous Assessment (40 marks)				End Semester Examination (60 marks)
	CA1	CA2	CA3	CA4	
Mode	Written Test (unit 1 & 2)	Written Test (unit 3 & 4)	Quiz / MCQ	Model Examination	Written Examination
Duration	2 hours	2 hours	1 hour	3 hours	3 hours
Exam Marks	60	60	40	100	100
Converted to	20	20	10	10	60
Marks	40				60

Note:

- CA1 and CA2 Assessment test should be conducted. Best of one will be considered for the internal assessment of 20 Marks.
- CA3 Online quiz examination (MCQ) should be conducted covering the complete syllabus. The marks should be converted to 10 marks for the internal assessment
- CA4 Model examination should be conducted as per the end semester question pattern. The marks should be converted to 10 marks for the internal assessment.

ME232120	BASICS OF MECHANICAL ENGINEERING	L	T	P	C
Theory		3	0	0	3

Unit I	ROLES AND RESPONSIBILITIES OF MECHANICAL ENGINEERING	
Introduction to Mechanical Engineering-Who is a Mechanical Engineer-Job Description-Roles and Responsibilities-Scope and Opportunities – Mechanical Engineering-Manufacturing-Automobile-PowerGeneration-Maintenance-Service-Design-Quality-Materials Management-Logistics.		9

Unit II	ENGINEERING MATERIALS, METAL FORMING AND JOINING	
Engineering Materials Importance of Materials - Types - Properties: Mechanical - Thermal - Electrical - Magnetic - Chemical - Usages - Applications. **Metal Forming** Definition – Types – Hot and Cold working – Hot working –Description and working of drop hammer – Rolling – Roll forging – Extrusion – Cold working – Description and working of Mechanical press- Wire drawing **Metal Joining** Types of Joints – Definitions and Applications: Temporary and Permanent - Examples.		9

Unit III	FUNDAMENTALS OF MACHINE TOOLS	
Machine Tools – Introduction **Lathe** Principle of Lathe – Description and function of Lathe **Drilling Machine** Principle of Drilling – Types - Upright Drilling (Description and Function only) **Milling Machine** Principle of Milling – Horizontal Milling Machine – Vertical milling machine (Description and Function only) **CNC** Introduction to CNC and its applications		9

Unit IV	POWER TRANSMISSION DRIVES AND LUBRICATION	
Power Transmission Drives Belt drive – Types - Flat, V Belt & Circular or Rope Drive Applications - Applications of chain drive – Gear drives – Types of gear drives – spur gear drive – Helical gear drive – Bevel gear drive – Worm and Worm wheel drive – Rack and pinion drive – Cam Drive - Descriptions. **Lubrication** Lubricants - Types -Solid, Semi Solid, Liquid –Properties of lubricants - Purpose of lubrication –Methods of lubrication - Ring Oiler Lubrication, Drip feed Lubrication and Grease Cup Lubrication.		9
Unit V	**FUNDAMENTALS OF HEAT POWER ENGINEERING**	
Thermodynamics Definition - Heat - Modes of heat transfer – conduction, convection and radiation (Definition only) **IC Engines** Classification of IC Engines – Working of – Four stroke Petrol Engine – Diesel Engine –Introduction to Battery Electrical Vehicles (BEV) **Power Plants** Power Plants- Introduction to Steam Power plant –Introduction to Nuclear Power plant –Introduction to Solar power plant (PV only) - Introduction to Windmill - Horizontal axis and vertical axis wind mill		9
TOTAL HOURS		**45**

Suggested List of Students Activity:

- Presentation/Seminars by students on any recent technological developments based on the course.
- Periodic class quizzes conducted on a weekly/fortnightly based on the course.
- Mini project that shall be an extension of any practical lab exercise to real-world application.

Text Books:

- Fundamentals of Mechanical Engineering / G.S.Sawheny-PHI.
- AnIntegrated Course in Mechanical Engineering / R.K.Rajput / Birala Publications.
- I.C.Engines / V.GANESAN-TMH.
- Strength of Materials by R.K.Rajput, S.Chand & Company.
- Thermal Engineering / R.K.Rajput / LakshmiPublications.
- Elements of Workshop Technology - Vol. 1 & 2 - Hajra Choudhury - Media Publishers & Promoters, India.

References:

- Thermodynamics and Heat Engines / R .Yadav / Central Book Depot.
- Strength of Materials by R.K.Bansal, Laxmi Publishers.

- Engineering Mechanics Statics and dynamics by A.K.Tayal, Umesh Publication,Delhi.
- Fundamentals of I.C.Engines - P.W.Gill, J.H.Smith & Ziurys - IBH & Oxford pub.
- Workshop Technology Part 1 & Part 2 - W A J Chapman - Cambridge University Press
- A Textbook of Production Engineering - PC Sharma - S Chand

Web-based/Online Resources:

- NPTEL (Website): The National Programme on Technology Enhanced Learning (NPTEL) offers free online courses on manufacturing processes and other Mechanical Engineering topics. NPTEL Mechanical Engineering.

CE232120	BASICS OF CIVIL ENGINEERING	L	T	P	C
Theory		3	0	0	3

Introduction

This course is designed to provide a comprehensive introduction to the field of Civil Engineering, offering fundamental knowledge across various sub-disciplines within this field. It is tailored to meet the educational requirements typically outlined in the syllabus for diploma studies in Engineering. The topics covered are based on the syllabus for diploma studies in Engineering and technology. The contents are arranged in sequence, that starts from the basic concepts and followed in List of materials, Details of materials, Introduction to building planning, Building Construction, Introduction to Surveying, Levelling and Advancements in Civil Engineering.

Throughout this course, students can expect to acquire a solid foundation in civil engineering, providing them with valuable insights into the complexity of industrial projects and the skills required for success in this field. The goal is to equip students with the knowledge and expertise needed to excel in the diverse and challenging world of civil engineering.

Course Objectives

The objective of this course is to enable the student to

- Introduction to Civil Engineering: Provide students with a fundamental understanding of the field and its significance in various industries and society.
- Foundational Knowledge: Impart essential principles, theories, and concepts in physics, mathematics, and materials science that are pertinent to civil engineering.
- Materials Understanding: Familiarize students with the properties and usage of common construction materials like concrete, steel, and timber.
- Building Planning: Enable students to comprehend architectural plans, designs, and considerations for constructing safe, functional, and aesthetically pleasing buildings.
- Surveying Skills and Levelling Proficiency: Illustrate the basics of land measurement, surveying instruments, and techniques for precise mapping. Provide knowledge and skills related to levelling techniques to ensure accurate elevation measurements in construction projects.
- Awareness of Advancements: Explore emerging technologies and trends in civil engineering, promoting an understanding of the field's ongoing evolution.

Course Outcomes

After successful completion of this course, the students should be able to		
CO.1	:	Describes the uses of different materials in Civil Engineering.
CO.2	:	Interpret various aspects of the building planning.
CO.3	:	Identify the various building components and methods of constructions.
CO.4	:	Illustrate the different equipment for angular and linear measurements.
CO.5	:	Describes various public transportation systems, water conservation methods, and advances in civil engineering.

Pre-requisites : NIL

CO/PO Mapping

CO / PO	PO1	PO2	PO3	PO4	PO5	PO6	PO7
CO1	3	1	1	1	1	1	3
CO2	3	1	1	1	1	1	3
CO3	3	1	1	1	1	1	3
CO4	3	1	1	2	1	1	3
CO5	3	1	1	1	1	1	3

Legend: 3-High Correlation, 2-Medium Correlation, 1-Low Correlation

Instructional Strategy

- Engage and Motivate: Teachers should actively engage students to boost their learning confidence.
- Real-World Relevance: Teachers are expected to physically show various building materials while imparting instructions. Students should be encouraged to collect sample of various building materials so as to create a museum of materials in the polytechnic.
- Interactive Learning: Teachers are expected to organize demonstrations and field visits to show various stages of construction operations., use of various measurements, instruments in surveying and also train the students to use appropriate instruments to avoid/minimize errors during surveying for better learning experiences.
- Application-Based Learning: Throughout the course, a theory-demonstrate-practice-activity strategy may be used to ensure the outcome of the learning is employability-based.
- Simulation and Real-World Practice: In addition to theoretical instructions, different activities pertaining to the simulated Environment, transitioning to real-world scenarios when possible, like expert lectures, seminars, visits to greenhouse, effluent treatment plant of any industry, rain water harvesting plant etc. may also be organized.
- Encourage Critical Analysis: Foster an environment where students can understand the experiment outcomes and infer the potential sources of error in case of any discrepancies.

Assessment Methodology

	Continuous Assessment (40 marks)				End Semester Examination (60 marks)
	CA1	CA2	CA3	CA4	
Mode	Written Test (unit 1 & 2)	Written Test (unit 3 & 4)	Quiz / MCQ	Model Examination	Written Examination
Duration	2 hours	2 hours	1 hour	3 hours	3 hours
Exam Marks	60	60	40	100	100
Converted to	20	20	10	10	60
Marks	40				60

Note:

- CA1 and CA2 Assessment test should be conducted. Best of one will be considered for the internal assessment of 20 Marks.
- CA3 Online quiz examination (MCQ) should be conducted covering the complete syllabus. The marks should be converted to 10 marks for the internal assessment
- CA4 Model examination should be conducted as per the end semester question pattern. The marks should be converted to 10 marks for the internal assessment.

Course Code	**Basics of Civil Engineering**	L	T	P	C
Program Core		3	0	0	3
Unit I	**INTRODUCTION TO CIVIL ENGINEERING AND CIVIL ENGINEERING MATERIALS**				
Introduction to Civil Engineering – Various disciplines of Civil engineering - Scope, Impact - Role of Civil Engineer - Units of measurement - Unit conversion (Length, Area, Volume) - List of materials, Details (types, properties, uses) of materials: Cement, Aggregate, Brick, Steel, Concrete, Stone, Soil, Mortar, Timber, Plastic, Epoxy, Fly Ash, Steel slag, Copper slag, Bitumen, Optical fiber, Pipe, Wire, Cable and FRP.					10 Hrs
Unit II	**INTRODUCTION TO BUILDING PLANNING**				
Introduction: Introduction to National Building Code of India 2016 and its parts – Classification of buildings **Conventions, Symbols:** General – Conventions - Title block- Scales- Line work- Lettering- Symbols-Abbreviations. **Building Bye-Laws:** Objects of bye-laws - Importance of bye-laws- Function of local authority - Setbacks - Plot Coverage - Number of floors - Height of building - Built up Area - Floor space index (FSI) - Views and details necessary for the preparation of a civil engineering drawing. **Planning of Buildings:** Basic requirements, elements - Introduction to various buildings, computation of plinth area, computation of carpet area - Introduction to the types of					10 Hrs

buildings as per NBC - Selection of site for construction of buildings - Components of a residential building - Requirements - Types of Rooms – Minimum Size requirement for each type of rooms - Introduction to the Industrial buildings - Types - Introduction to the public buildings - Types - General requirements of Public Buildings.		
Unit III	**BUILDING CONSTRUCTION**	
Building Construction – Foundations, Classifications - Masonry Works – classifications, definition of different technical terms, Roofs – functional requirements, basic technical terms, roof covering materials, Floors – functions, types, flooring materials (brief discussion), Plastering and Painting – objectives, types.		08 Hrs
Unit IV	**INTRODUCTION TO SURVEYING AND LEVELLING**	
Introduction, Conventional systems of measurements, Fundamental principles, Classifications. Linear measurement: Instruments used, Chain Survey on plane ground, Offset, Ranging. **Angular measurement:** Compass - Instrument used, Meridian, Bearing and Local attraction. **Leveling:** Instrument used, Terminology, Types of leveling, and Methods of leveling, Introduction to contour survey. **Modern tools:** Introduction to Theodolite, Total Station, Introduction to Global Positioning System (GPS) and Geographic information system (GIS).		09 Hrs
Unit V	**ADVANCEMENTS IN CIVIL ENGINEERING**	
Mass Transportation systems - Bus Rapid Transit System (BRTS), Metro Railway, Solid waste management systems, Rainwater harvesting systems, Smart city and its features, Green buildings, Energy efficient buildings, Heritage structures & its conservations - Descriptions with Sketches only.		08 Hrs
TOTAL HOURS		**45** Hrs

Suggested List of Students Activities

- Draw the line plan of 1BHK, 2BHK homes.
- Identification, demonstration & prepare sketches of Locally Available building materials
- Prepare Sketches of masonry works.
- Collect the information about modern survey instruments available in the market and prepare the report.
- Visit any one construction site and prepare the construction activity report
- Presentations about any recent technological developments in civil engineering field
- Study the Road, Rail Transportation systems, Rainwater harvesting systems in your city or nearest place and submit the reports
- Conduct class quizzes on a fortnightly basis.
- Prepare Models of any one of the following - Residential building, Commercial, Primary health center, School building
- Micro project that shall be an extension of any practical lab exercise to real-world civil engineering application

Reference Books

- S.C. Rangwala, Engineering Material, Charotar Publication.
- S.C. Rangwala. Civil Engineering Drawing, Charotar Publication.
- Gurucharan Singh, Building planning, designing and scheduling, Standard Publisher.
- Dr. B. C. Punamia, Building Construction Publisher: Laxmi Pub. Delhi.
- N. N. Basak, Surveying and leveling, Tata McGraw Hill Education.
- H.S. Peavy, D.R. Rowe and G. Tchbanoglous, Environmental Engineering, McGraw Hill International Edition.

- Khanna S. K. and Justo C. E.G., Highway Engineering, Publisher :Nemchand and Brothers.
- Papacostas C.S., Prevedouros, "Transportation Engineering and Planning, 3 rd Edition, Prentice Hall of India, New Delhi, 2002.
- Vukan R.Vuchie, Urban Transit Systems and Technology, John Wiley and Sons, 2007.
- M.S.Palanichamy, Basic Civil Engineering, McGraw Hill.S. Ramamrutham, Basic Civil Engineering , Dhanpatrai Publication.
- Gkhirasaar, Basic Civil Engineering Dhanpatrai Publication.
- SS Bhavikatti, Introduction to civil engineering, New Age international Publishers.

Web-based/Online Resources

- https://nptel.ac.in/courses/105106201
- https://nptel.ac.in/courses/105102088/
- https://nptel.ac.in/courses/124105013/
- http://nptel.ac.in/courses/105107122/
- http://nptel.ac.in/courses/105107157/
- https://nptel.ac.in/courses/105102015/
- http://nptel.ac.in/courses/105101087/
- http://nptel.ac.in/courses/105104100/
- https://nptel.ac.in/courses/105103205/
- https://nptel.ac.in/courses/105102195/

EE232120	BASICS OF ELECTRICAL AND ELECTRONICS ENGINEERING	L	T	P	C
Theory		3	0	0	3

Introduction:

Fundamental knowledge in the field of Electrical and Electronics are essential for all engineers. They must thoroughly study the characteristics of electrical & electronic components before delving into advanced applications. This foundational subject is crucial for a comprehensive grasp of the principles. To develop the necessary psychomotor skills in this area, students should not only understand the concepts but also apply them effectively.

Course Objectives:

The objective of this course is to enable the student to

- Understand the fundamental knowledge and skills in basic electrical engineering relevant for diploma holders in their professional life.
- Comprehend the core concepts and an overview of Electrical Engineering for circuit branch specialization.
- Identify the characteristics and uses of semiconductors, PN junction diodes, and Zener diodes, including their symbols.
- Analyze the construction and operation of bipolar junction transistors and their use in electronics.
- Describe the safety protocols, PCB technology, materials, design basics, and essential soldering techniques.

Course Outcomes:

After successful completion of this course, the students should be able to

CO1: Analyze the foundational principles of electrical quantities and basic laws for precise calculations in DC circuits with resistors and capacitors.
CO2: Explore different power generation methods and the role of electricity in different job sector.
CO3: Analyze resistors, capacitors, and inductors, including colour coding
CO4: Examine semiconductor properties, doping processes, and diode functions to interpret their electrical characteristics and applications
CO5: Understand the principles of PCB design and the process of soldering electronic components.

Pre-requisites:

Knowledge of basic Mathematics and Science

CO/PO Mapping

CO / PO	PO1	PO2	PO3	PO4	PO5	PO6	PO7
CO1	3	2	1	-	-	-	-
CO2	1	3	2	-	-	-	-
CO3	3	1	-	-	-	-	-
CO4	3	2	2	-	-	-	-
CO5	3	2	2	-	-	-	-

Legend: 3-High Correlation, 2-Medium Correlation, 1-Low Correlation

Instructional Strategy:

- Engage and Motivate: Instructors should actively engage students to boost their learning confidence.
- Real-World Relevance: Incorporate relatable, real-life examples and engineering applications to help students understand and appreciate course concepts.
- Interactive Learning: Utilize demonstrations and plan interactive student activities for an engaging learning experience.
- Application-Based Learning: Employ a theory-demonstrate-practice-activity strategy throughout the course to ensure outcome-driven learning and employability.
- Simulation and Real-World Practice: Conduct demonstrations and hands-on activities in a simulated environment, transitioning to real-world scenarios when possible.
- Encourage Critical Analysis: Foster an environment where students can honestly assess experiment outcomes and analyze potential sources of error in case of discrepancies.

Assessment Methodology

	Continuous Assessment (40 marks)				End Semester Examination (60 marks)
	CA1	CA2	CA3	CA4	
Mode	Written Test (unit 1 & 2)	Written Test (unit 3 & 4)	Quiz / MCQ	Model Examination	Written Examination
Duration	2 hours	2 hours	1 hour	3 hours	3 hours
Exam Marks	60	60	40	100	100
Converted to	20	20	10	10	60
Marks	40				60

Note:

- CA1 and CA2 Assessment test should be conducted. Best of one will be considered for the internal assessment of 20 Marks.
- CA3 Online quiz examination (MCQ) should be conducted covering the complete syllabus. The marks should be converted to 10 marks for the internal assessment
- CA4 Model examination should be conducted as per the end semester question pattern. The marks should be converted to 10 marks for the internal assessment.

EE232120	BASICS OF ELECTRICAL AND ELECTRONICS ENGINEERING	L	T	P	C
Theory		3	0	0	3

Unit I	**FUNDAMENTALS OF ELECTRICAL ENGINEERING**	
Introduction to Electricity – Uses of Electricity in Engineering & Health care - Duties & responsibilities of Electrical Engineer **Important Terms :** Electrical materials -Electrical quantities- [Charge, Current, Potential difference, DC & AC supply – Types & Difference, Power & Energy] **Basic Laws:** Coulomb's law - Lenz Law -Fleming's rule. **Electric Components & Circuits:** Simple Voltage, Current, Power & Energy calculation using Series & Parallel connection of Resistors, inductors & Capacitors using Ohm's law only.		9
Unit II	**ELECTRICAL SYSTEMS**	
Power generation: Energy sources – Power stations - Block Diagram of AC transmission – Functions of TANGEDCO **Conversion of Energy:** Motor, Generator and Transformer – main parts, types (names only) and uses. Different types of lamps – Simple lamp circuit - Applications of Solar PV panels – Concept of Electric Vehicles -Types – Domestic house wiring		9
Unit III	**PASSIVE COMPONENTS**	
Types of Electronic Components - Resistor, Capacitor and inductor - Symbol, Working Principle, Properties, Types and Uses - Colour Coding of Resistor - Self and Mutual Inductance		9
Unit IV	**FUNDAMENTALS OF SEMICONDUCTORS**	
Semiconductors - Energy Band, Fermi level, Intrinsic and Extrinsic Semiconductors, P-Type and N-Type Semiconductors, Drift Current, Diffusion Current. **PN Junction Diode and Zener Diode**-Symbol, construction and working- Forward Bias, Reverse Bias, VI Characteristics, Applications.		9
Unit V	**ELECTRICAL SAFETY, PCB AND SOLDERING**	
Electrical Safety: Hazards of electricity [shock, burns, arc-blast, Thermal Radiation, explosions, fires, effects of electricity on the human body] –Safety precautions - First Aid for Electrical Accidents - Protective devices– Earthing – lightning arrester		9

Introduction to PCB - Types, PCB Materials, Steps involved in preparation of a PCB. **Introduction to Soldering** - Types of Solder, Soldering Tools, Soldering Safety precautions.	
TOTAL HOURS	**45**

Suggested List of Students Activity:

- Presentation/Seminars by students on any recent technological developments based on the course
- Periodic class quizzes conducted on a weekly/fortnightly based on the course
- Micro project that shall be an extension of any practical lab exercise to real-world application
- Electricity Billing for domestic and institutional purposes
- Demonstration of Electrical Components
- Calculating Resistance value by Colour Coding Techniques
- Fabricating PCB for a simple circuit - with 2 or 3 elements

Text Books

- "Engineering circuit analysis" by W.H. Hayt& J.K. Kemmerly and Steven M. Durbin, , Tata McGraw Hill, 7th edition, New Delhi, 2007
- "Principles of Power Systems" by VK. Metha& Rohit Metha, S. Chand Publishers, 3rd Edition, 2005.
- "Electric and Hybrid Vehicles", by A K Babu, Second Edition, Khanna Publishers
- "Electronic Devices and Circuit Theory" by Robert L. Boylestad and Louis Nashelsky
- "Semiconductor Physics and Devices" by Donald A. Neamen
- "Electrical Safety Handbook", byJohn Cadick, Mary Capelli-Schellpfeffer, Dennis K. Neitzel, Al Winfield,Fourth Edition, The McGraw-Hill Companies, Inc.2012.

Reference

- "Electric Circuit Analysis", Sudhakar A and Shyam Mohan SP, , Tata McGraw Hill, New Delhi, 2008
- "Electric Circuits" by Mahmood Nahvi, Joseph A Edminister, , Tata McGraw - Hill Education, 5th Edition, 2010
- "Renewables and Efficient Electric Power Systems", Gilbert M. Master, , John Wiley and Sons, 2004.
- "Non-Conventional Sources Of Energy Sources", RAI G D, , KHANNA, 2012
- "Printed Circuit Boards: Design, Fabrication, and Assembly" by Raghbir Khandpur, 2005

Web-based/Online Resources:

- NPTEL (Website): The National Programme on Technology Enhanced Learning (NPTEL) offers free online courses on semiconductor devices and other electrical engineering topics. NPTEL Electrical Engineering
- Electronics Hub (Website): Offers tutorials and articles on PCB design, soldering techniques, and electronics projects.Electronics Hub

CS232120	BASICS OF COMPUTER ENGINEERING	L	T	P	C
Theory		3	0	0	3

Introduction:
Understanding the basic components and working of a computer gives more freedom for the learners to explore and innovate. The knowledge about the various hardware and software devices will help the learners to choose the devices according to the needs. The ability to differentiate the types of software is essential in the career of a computer engineer. This course will inculcate the much-needed essential information about the computers in the minds of young engineers.

Course Objectives:
The objective of this course is to enable the student to

- Comprehend the basics of computer organization.
- Investigate various input and output devices.
- Classify the different storage devices.
- Identify the types of software.
- Grasp the concept of the World Wide Web.

Course Outcomes:
After successful completion of this course, the students should be able to

CO1: Remember the basic organization of computers.
CO2: Distinguish between the various input and output devices.
CO3: Examine the different storage devices.
CO4: Describe the types of software.
CO5: Identify the concept of the internet and security issues related to internet use.

Pre-requisites:
Nil

CO/PO Mapping:

CO / PO	PO1	PO2	PO3	PO4	PO5	PO6	PO7
CO1	3	3	3	-	-	3	1
CO2	3	3	3	-	-	3	2
CO3	3	3	3	-	-	3	1

CO4	3	3	3	-	-	3	2
CO5	3	3	3	-	-	3	2

Legend: 3-High Correlation, 2-Medium Correlation, 1-Low Correlation

Instructional Strategy

- Engage and Motivate: Instructors should actively engage students to boost their learning confidence.
- Real-World Relevance: Incorporate relatable, real-life examples and engineering applications to help students understand and appreciate course concepts.
- Interactive Learning: Utilize demonstrations and plan interactive student activities for an engaging learning experience.
- Application-Based Learning: Employ a theory-demonstrate-practice-activity strategy throughout the course to ensure outcome-driven learning and employability.
- Simulation and Real-World Practice: Conduct demonstrations and hands-on activities in a simulated environment, transitioning to real-world scenarios when possible.
- Encourage Critical Analysis: Foster an environment where students can honestly assess experiment outcomes and analyze potential sources of error in case of discrepancies.

Assessment Methodology

	Continuous Assessment (40 marks)				End Semester Examination (60 marks)
	CA1	CA2	CA3	CA4	
Mode	Written Test (unit 1 & 2)	Written Test (unit 3 & 4)	Quiz / MCQ	Model Examination	Written Examination
Duration	2 hours	2 hours	1 hour	3 hours	3 hours
Exam Marks	60	60	40	100	100
Converted to	20	20	10	10	60
Marks	40				60

Note:

- CA1 and CA2 Assessment test should be conducted. Best of one will be considered for the internal assessment of 20 Marks.
- CA3 Online quiz examination (MCQ) should be conducted covering the complete syllabus. The marks should be converted to 10 marks for the internal assessment
- CA4 Model examination should be conducted as per the end semester question pattern. The marks should be converted to 10 marks for the internal assessment.

CS232120	BASICS OF COMPUTER ENGINEERING	L	T	P	C
Theory		3	0	0	3

Unit I	INTRODUCTION TO COMPUTERS	
Introduction – Characteristics of Computers – Evolution of Computers - Data, Information and Program - Basic Computer organization - Central Processing Unit, Processor Speed, Arithmetic and Logic Unit (ALU), Memory Unit, Input and Output Unit.		**8**
Unit II	**INPUT DEVICES AND OUTPUT DEVICES**	
Introduction to Input Devices – Keyboard - Scanner - Microphone – Mouse (Optical Mouse, Mechanical Mouse), Touch Screen, Web Camera, Wearable Devices - Computer Output Fundamentals – Printers (Laser Printer, 3D Printers) – Monitors (Liquid Crystal Display, Light Emitting Diodes) - Projector – Speaker – Computer Cables (HDMI, VGA, USB, PS/2, Ethernet, 3.5mm jack).		**10**
Unit III	**COMPUTER MEMORY AND STORAGE**	
Introduction - Bits and Bytes – Memory Hierarchy - Primary Memory – Random Access Memory (RAM) – Read Only Memory (ROM) - Secondary Memory – Secondary Storage Devices – Hard Disk, Optical Disks, Flash Drive, Solid State Drives (SSD) – Cache Memory.		**10**
Unit IV	**COMPUTER SOFTWARE**	
Computer Software –Types of Software – System Software: Compilers, Linker, Loader, Operating Systems (Windows, Linux Basics) – Application Software: Word Processors, Presentation Software, Graphics Software - Difference between Program and Packages – Introduction to Python Programming - Real Time Applications of Software: ERP, Finance.		**10**
Unit V	**INTERNET AND SECURITY**	
Concept of Internet - Applications of Internet - Popular Web Browsing Software – Search Engines – Computer Ethics –Social Networks and E-Commerce - Cloud Computing Basics - Security Issues Over the Internet – Introduction to Cyber Security.		**7**

Suggested List of Students Activity:

- Presentation/Seminars by students on any recent technological developments based on the course.
- Periodic class/online quizzes conducted based on the course.
- Blended learning activities to explore the recent trends and developments in the field.

References:

- Tamilnadu SCERT, Chapters 1-5, 17, Introduction to Computers, Number Systems, Computer Organization, Theoretical Concepts of Operating System, Working with Windows Operating System, Computer Ethics and Cyber Security, Computer Science, Class XI, 2022.
- NCERT, Chapter 1-3: Computer System, Encoding Scheme and Number Systems, Emerging Trends, Class XI, 2023.
- Tamilnadu SCERT, Chapter 15, Introduction to Internet and Email, Class XI, Computer Technology, 2019.
- Tamilnadu SCERT, Chapter 15, E-Commerce, Class XII, Computer Applications, 2022.
- Computer Programming and IT, Ashok N. Kamthane, Raj Kamal, Pearson India, 2012, ISBN: 9788131774694
- Computer Ethics Etiquette and Safety (for the 21st century student), Nancy E. Wilfred, Viva Books Private Limited 2009. ISBN-13 : 978-8130909042
- Cloud Computing, A. Srinivasan, Pearson India, 2014, ISBN: 9789332537439

Web-based/Online Resources:

- CPU Speed : https://www.intel.com/content/www/us/en/gaming/resources/cpu-clock-speed.html
- Types of Computer Cable Connections : https://www.buildcomputers.net/computer-cable-connections.html
- Social Network: https://www.britannica.com/technology/social-network

DP232370	DRAFTING PRACTICES	L	T	P	C
PRACTICAL		0	0	4	2

Introduction:

Engineering drawing is the language of engineers. By means of drawing, the shape, size, finish, colour, and construction of any object can be described accurately and clearly. Hence, drawing is a way for communicating engineer's ideas, designs, and thoughts to others. It is necessary for the engineers to develop their skill in preparing engineering drawings. This subject is planned to include sufficient practices which would help the student in visualization of two-dimensional objects and developing the drawing skills. Nowadays, Computer Aided Drafting (CAD) practices are used invariably in all the industries to create drawings easily and quickly. Hence this subject is aimed to acquire basic knowledge in manual drafting as well as in CAD. The chapters are arranged in sequence and starts from the basic concepts of lettering, dimensioning, geometrical constructions, construction of polygon and department specific drawings.

Course Objectives:

The objective of this course is to enable the student to

- List the usage of various drawing instruments.
- Understand the basics of lettering and dimensioning of drawings.
- Acquire the ability to draw the basic geometrical constructions.
- Understand the basics of CAD.
- Use CAD in designing and developing department specific drawings.

Course Outcomes (CO):

On successful completion of this course, the student will be able to

CO1 : Utilize various drawing instruments to create manual drawing.

CO2 : Construct the drawings as per BIS

CO3 : Build the basic geometrical constructions

CO4 : Create department specific drawings using various commands in CAD.

Pre-requisites: NIL

CO/PO Mapping

CO / PO	PO1	PO2	PO3	PO4	PO5	PO6	PO7
CO1	3	2	1	-	-	-	-
CO2	2	3	2	-	-	-	-
CO3	2	1	3	-	-	-	-
CO4	-	-	-	3	-	-	-

CO5	-	-	-	-	-	-	-

Legend: 3-High Correlation, 2-Medium Correlation, 1-Low Correlation

Instructional Strategy:

- **Engage and Motivate:** Instructors should actively engage students to boost their learning confidence.
- **Real-World Relevance:** Incorporate relatable, real-life examples and engineering applications to help students understand and appreciate course concepts.
- **Interactive Learning:** Utilize demonstrations and plan interactive student activities for an engaging learning experience.
- **Application-Based Learning:** Employ a theory-demonstrate-practice-activity strategy throughout the course to ensure outcome-driven learning and employability.
- **Simulation and Real-World Practice:** Conduct demonstrations and hands-on activities in a simulated environment, transitioning to real-world scenarios when possible.
- **Encourage Critical Analysis:** Foster an environment where students can honestly assess experiment outcomes and analyze potential sources of error in case of discrepancies.

Assessment Methodology

	Continuous Assessment (40 marks)				End Semester Examination (60 marks)
	CA1	CA2	CA3	CA4	
Mode	Manual Drafting (Unit – I)	Manual Drafting (Unit – II)	Model Exam	Practices and Record of Work done	Practical Examination
Duration	2 hours	2 hours	3 hours	-	3 hours
Exam Marks	60	60	100	100	100
Converted to	10	10	10	10	60
Marks	**40**				**60**

Note :

1) CA1 : Three questions should be given from Unit – I to draw in the drawing sheet and the same should be evaluated for 60 Marks. Each question carries 20 Marks.
2) CA2 : Three questions should be given from Unit – II to draw in the drawing sheet and the same should be evaluated for 60 Marks. Each question carries 20 Marks.
3) CA3 : Model Examination for 100 Marks.
4) CA4 : All exercises [4 Drawing sheets (each 5 marks) + 8 CAD Drawings (each 10 marks)]. The same should be submitted for the board examination as a record of work done.

DP232360	DRAFTING PRACTICES	L	T	P	C
PRACTICAL		0	0	4	2

COMMON TO ALL BRANCHES

PART – A : MANUAL DRAFTING **[Note : The drawings (Ex.Nos.1 – 4) should be drawn in drawing sheets and the same should be submitted for evaluation]**		
Unit – I	**BASICS OF DRAWING AND DIMENSIONING**	
Importance of engineering drawing - drawing practice as per BIS code - drawing instruments: drawing board, mini drafter, drawing sheets, drawing pencils, set squares, etc. **Lettering and numbering** as per BIS - single stroke letters - uppercase and lowercase letters. **Dimensioning** – need for dimensioning - terms and notations as per BIS - parallel, chain and progressive dimensioning.		4
Ex.No.1. (a) Rewrite the given statement in a single stroke vertical uppercase letters (5 statements) (b) Rewrite the given statement in a single stroke vertical lowercase letters (5 statements)		4
Ex.No.2. Redraw the given drawing and dimension it as per BIS. (Fig.1 – Fig.4)		6
Unit – II	**GEOMETRIC CONSTRUCTION AND CONSTRUCTION OF POLYGONS**	
Geometric Constructions : Bisect a straight line, an arc and an angle – divide a straight line and circle into a number of equal divisions – construct an arc touching two straight lines at any angle – construct an arc touching two arcs. **Construction of Polygons :** Triangle, square, rectangle, pentagon and hexagon – various positions – side of the polygon is parallel, perpendicular and inclined to principal planes.		4
Ex.No.3. (a) Divide a straight line and circle into given number of equal divisions (b) Construct an arc touching two straight lines (c) Construct an arc touching two arcs		4
Ex.No.4. Construct the polygon of given size (Choose any suitable method) (Triangle, Rectangle, Square, Pentagon and Hexagon)		4
PART – B : COMPUTER AIDED DRAFTING **[Note : The drawings (Fig.1 – Fig.8) should be created using CAD Software and the printout should be submitted for evaluation]**		
Unit – III	**BASICS OF COMPUTER AIDED DRAFTING (CAD)**	
Introduction to CAD – applications – advantages of CAD over manual drafting – understanding user interface – types of coordinate systems - absolute, relative, polar – drafting settings – Limits – Units – Creating objects using draw commands – Line, Arc, Circle, Rectangle, Ellipse, Polygon, Point, Pline, Sketch – Creating text – Dtext, Mtext, Text styles – Mline, spline – Drawing with precision – Osnap options – drawing aids – Fill, Snap, Grid, Ortho lines – Function keys – Editing and modify commands – Object selection methods – Erasing object – Oops – Canceling and undoing a command – Copy – Move – Array – Offset – Scale – Rotate – Mirror – Break – Trim – Extend – Explode – Divide –		8

Measure – Stretch – Lengthen – Changing properties – Color, Line types, LT scale – Matching properties – Editing with grips – Pedit – Ddedit – Mledit. Basic dimensioning – Editing dimensions – Dimension styles – Adding leaders – Creation of blocks – Wblock – Inserting a block – Block attributes – Hatching – Pattern types – Boundary hatch – Working with layers – View group commands – Zoom, redraw, regen, pan – Enquiry tools. Page setup in layout – Viewports – Plotting drawings.	
Ex.No.5. Draw the given drawing and dimension it as per BIS using CAD (Fig.1 – Fig.4)	6

FOR MECHANICAL ENGINEERING AND ALLIED COURSES ONLY

Unit – IV	**ORTHOGRAPHIC VIEWS USING CAD**
Orthographic projections – planes of projection – principal orthographic views – first angle projection – third angle projection – Construction of orthographic views of simple components using CAD.	4
Ex.No.6. Draw the orthographic views of the given component using CAD (Fig.5 – Fig.8)	8

FOR CIVIL ENGINEERING AND ALLIED COURSES ONLY

Unit – IV	**BASIC CIVIL ENGINEERING DRAWINGS USING CAD**
Important terminologies used in Civil Engineering Drawing – Basic conventional symbols – materials, doors, windows, stairs, walls, sanitary fittings, etc. – Basic civil engineering drawing using CAD.	4
Ex.No.6. Draw the given civil engineering drawing using CAD (Fig.5 – Fig.8) (a) Cross sectional view of L -section, T-section, Channel and I - Section (b) Plan, Elevation and Sectional view of a Single storey, Single room consisting of RCC Flat Roof, Masonry walls, Lintel cum Sunshade, Door and windows of standard size. (c) Floor plan of a 2BHK residential building. (d) Plan and Sectional Elevation of a RCC Column with square isolated footings.	8

FOR EEE AND ALLIED COURSES ONLY

Unit – IV	**BASIC ELECTRICAL WIRING CIRCUITS USING CAD**
Basic electrical symbols - fuse, main switch, electrical bell, earth, SPST, DPST, TPST, Neutral link, ammeter, voltmeter, wattmeter, energy meter, frequency meter, power factor meter, timer, buzzer, MCB, etc. – Drawing of basic electrical circuits diagrams using CAD.	4
Ex.No.6. Draw the given electric circuit diagram using CAD. (Fig.5 – Fig.8) (a) Stair-case wiring electric circuit (b) Control and main circuit of automatic star delta starter (c) Control circuit for jogging in cage induction motor (d) Single phase wiring circuit	8

FOR ECE, COMPUTER ENGINEERING AND ALLIED COURSES ONLY

Unit – IV	BASIC ELECTRONICS CIRCUITS USING CAD	
Basic electronics symbols - Resistor, Capacitor, Inductor, PN Junction Diode, Zener Diode, BJT, JFET, MOSFET, GND and VCC, Transformer, Switch, Buzzer, Battery, etc. Drawing of basic electronics circuits diagram using CAD.		4
Ex.No.6. Draw the given electronics circuit diagram using CAD. (Fig.5 – Fig.8) (a) Half Wave Rectifier circuit (b) Bridge Rectifier circuit (c) Common Emitter Amplifier circuit (d) Fire Alarm circuit		8

Continuous Assessment Test & Revision	8
Total Periods	**60**

<u>Note</u> : Suitable drawings should be provided to students for Ex.Nos.2, 5 & 6

Suggested List of Students Activity:

- Download and learn the BIS Codes for various engineering practices.
- Prepare 3D modesl of drawings with the help of cardboard to visualize and understand the orthographic views.
- Presentation/Seminars by students on any recent technological developments based on the course
- Periodic class quizzes conducted on a weekly/fortnightly based on the course
- Mini project that shall be an extension of any practical lab exercise to real-world application

Text Books:

1. Bhatt N.D. and Panchal V.M., “Engineering Drawing”, Charotar Publishing House, 53 Edition, 2019.
2. Natrajan K.V., “A Text Book of Engineering Graphics”, Dhanalakshmi Publishers, Chennai, 2018.
3. T. Jayapoovan, “Engineering Drawing & Graphics Using Autocad”, Vikas Publishing House Pvt. Ltd.
4. M. Yogesh, B. S. Nagaraja, N. Nandan, “Ccomputer Aided Electrical Drawing”, PHI Learning Pvt. Ltd.
5. Thomas Tumilty, “AutoCAD for Electronics”, PHI Learning Pvt. Ltd.

Reference:

1. Basant Agrawal, Agrawal C M “Engineering Drawing”, McGraw hill HED
2. Venugopal.K, Prabhu Raja V, “Engineering Graphics”, New Age International Publishers.
3. Mark Dix, Paul Riley, “Fundamentals of AutoCAD” PHI Learning Pvt. Ltd.
4. BL Theraja, AK Theraja, “A Textbook of Electrical Technology”, S. Chand & Company Ltd.
5. D Chattopadhyay, PC Rakshit, “Fundamentals of Electric Circuit Theory”, S. Chand & Company Ltd.
6. R. S. Sedha, “A Textbook of Electronic Circuits”, S. Chand & Company Ltd.

Web-based / Online Resources:

- https://www.autodesk.in/campaigns/autocad-tutorials
- https://www.mycadsite.com/tutorials.html

BOARD EXAMINATIONS

Allocation of Marks

Description	Marks
Part – A : Short Answer Questions	
25 One mark Questions from Unit – I, II & III (25 x 1 = 25 Marks)	25
Pert – B : Computer Aided Drafting	
1) Drawing & Dimensioning using CAD from Unit – III Any **one** drawing out of four drawings (1 x 25 = 25 Marks)	25
2) Department specific drawing using CAD from Unit – IV Any **one** drawing out of four drawings (1 x 45 = 45 Marks)	45
Viva – voce	5
Total Marks	**100**

DRAWINGS FOR LAB EXERCISES

COMMON FOR ALL BRANCHES *(All dimensions are in mm)*

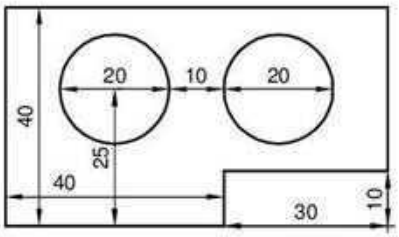

Fig.1

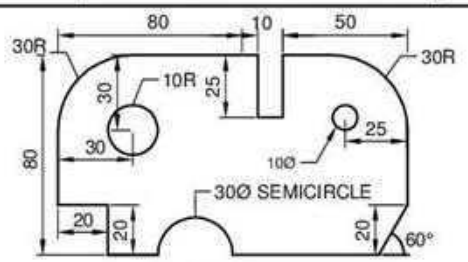

Fig.2

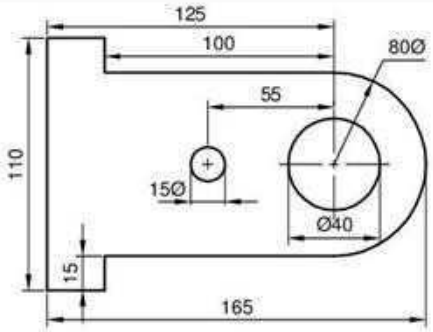

Fig.3

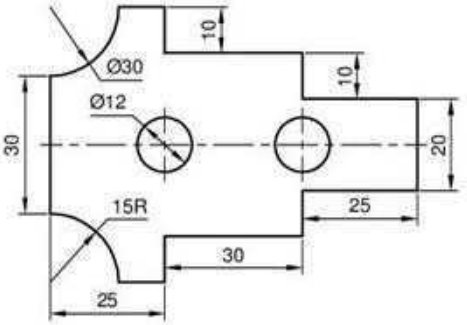

Fig.4

FOR MECHANICAL ENGINEERING AND ALLIED COURSES ONLY

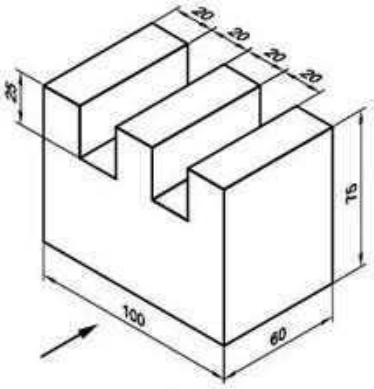

Fig.5

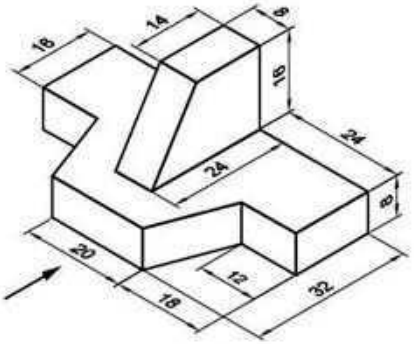

Fig.6

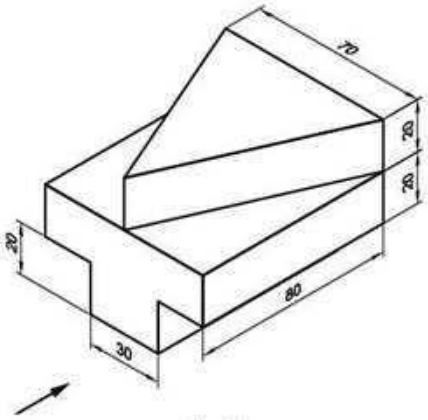

Fig.7

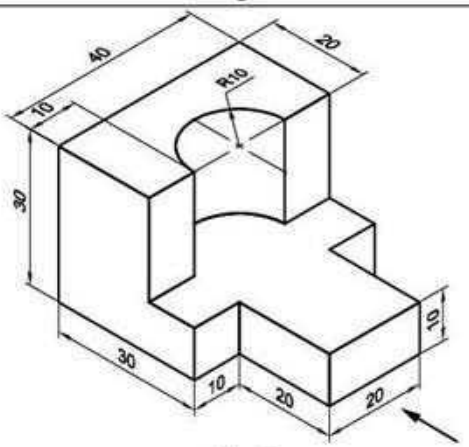

Fig.8

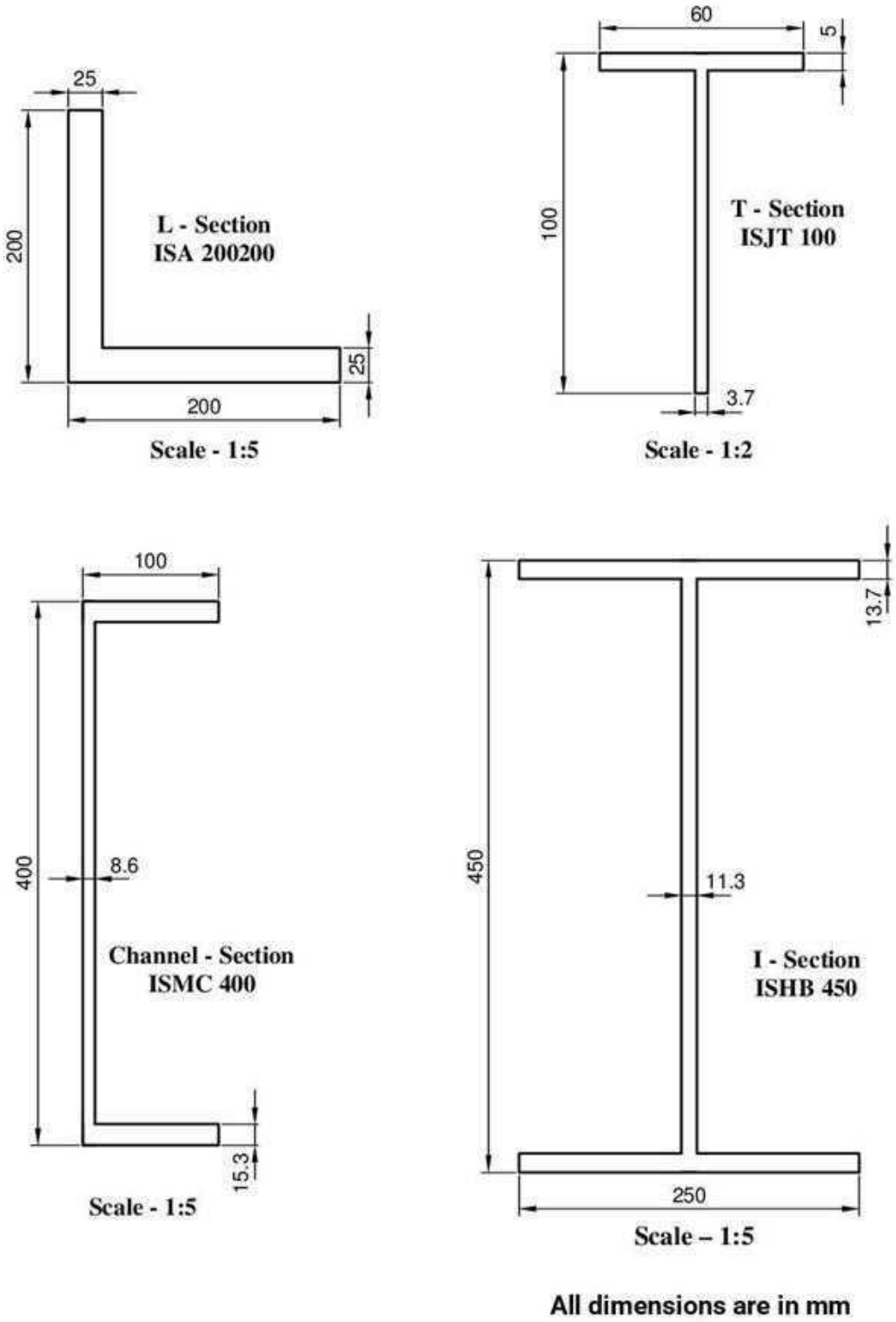

Fig.5. Cross sectional view of L -section, T-section, Channel section and I- Section

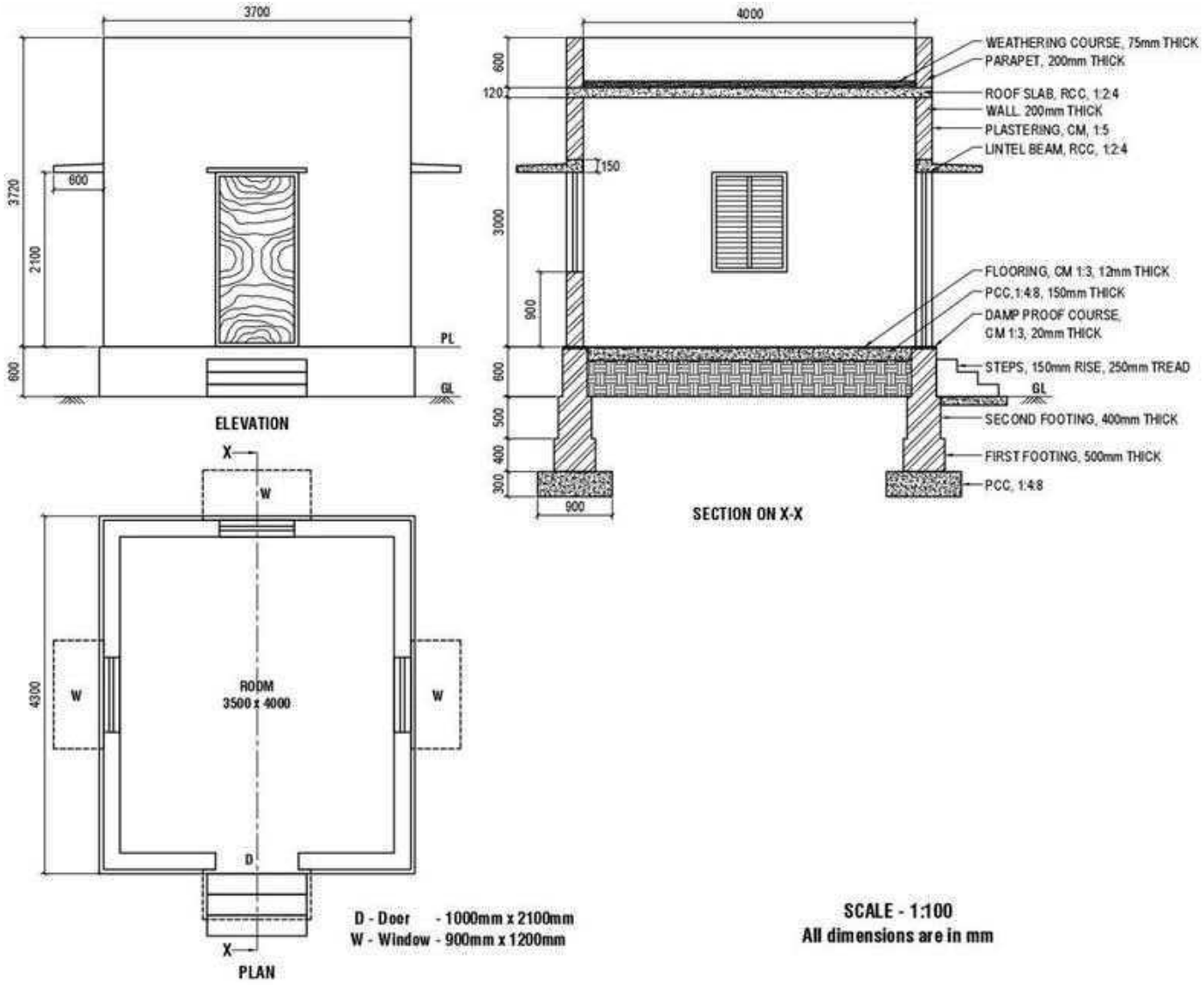

Fig.6. Plan, Elevation and Sectional view of a single storey building with single room

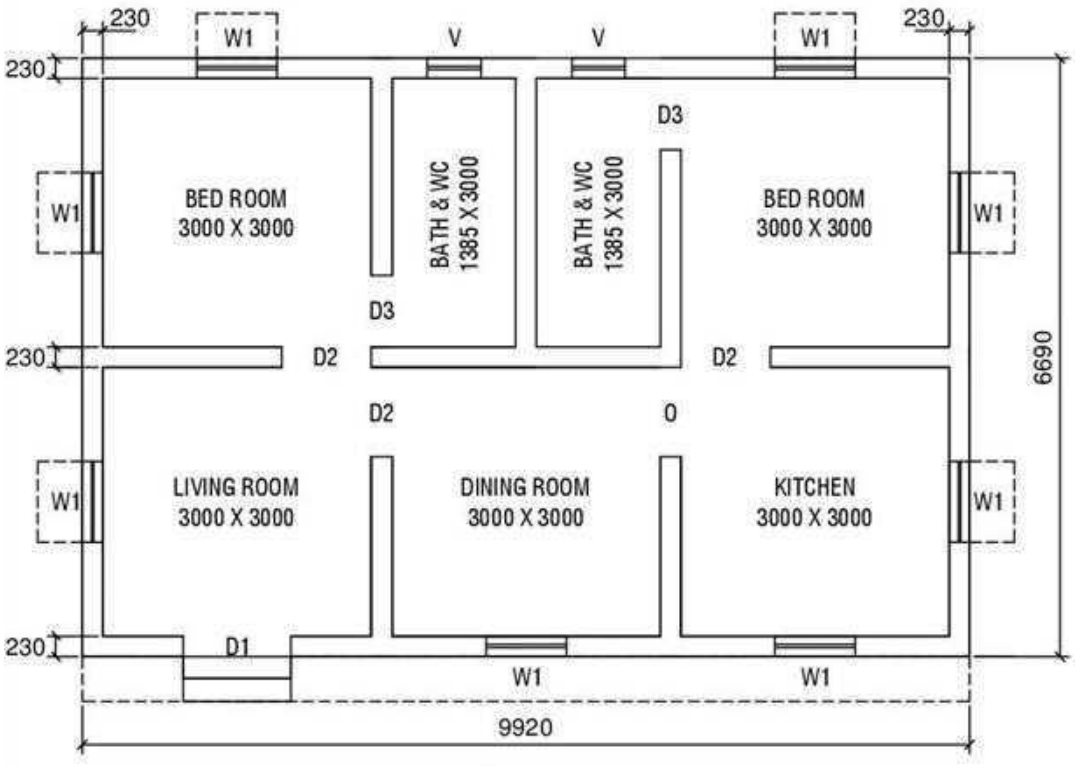

Window (W) - 900 mm x 1200 mm
Ventilator (V) - 600 mm x 600 mm

Door (D1) - 1200 mm x 2100 mm
Door (D2) - 1000 mm x 2100 mm
Door (D3) - 800 mm x 2100 mm

SCALE – 1:100
All dimensions are in mm

Fig.7. Floor plan of 2 BHK residential building

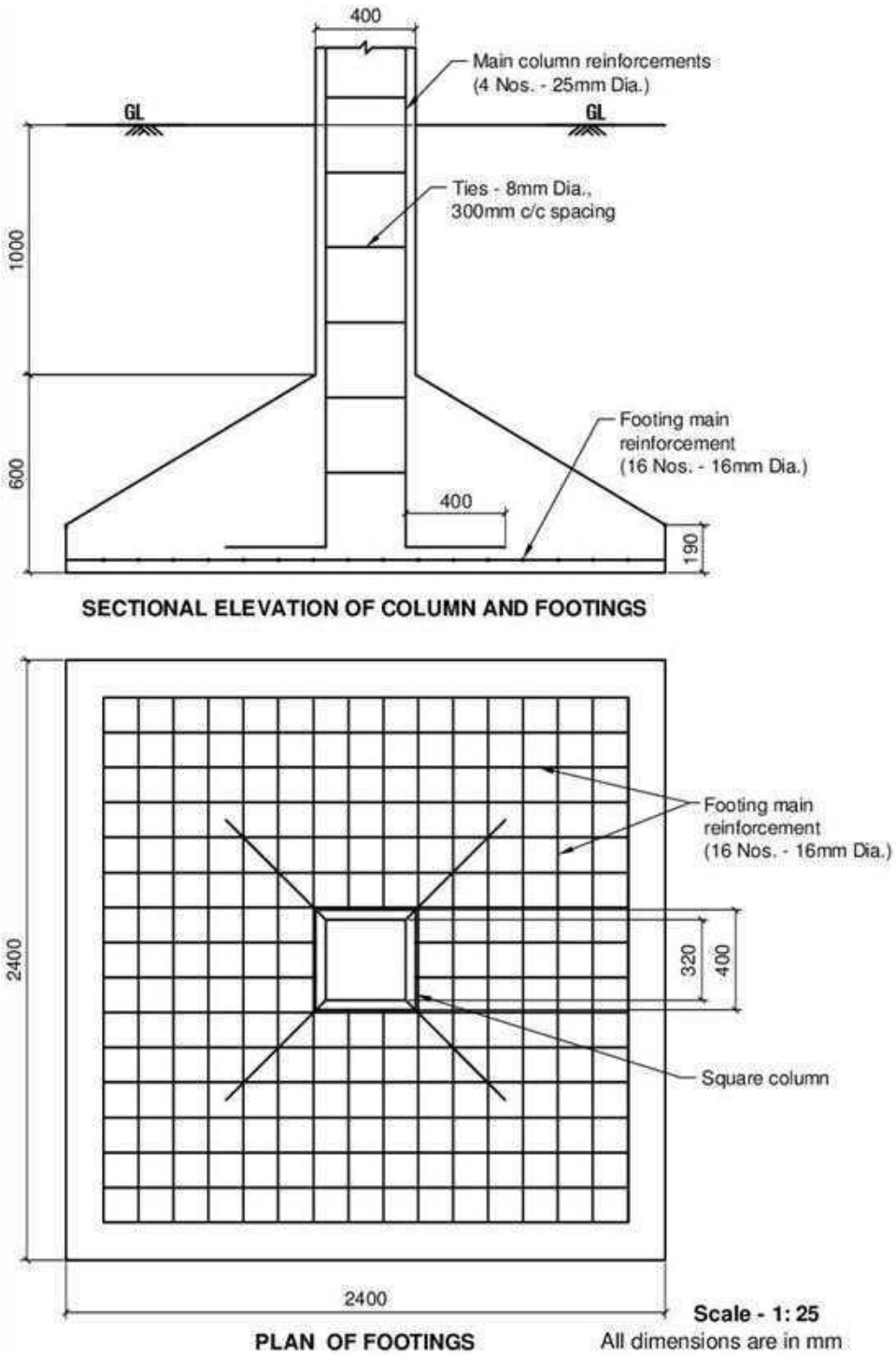

Fig.8 RCC column with square isolated footing

FOR EEE AND ALLIED COURSES ONLY

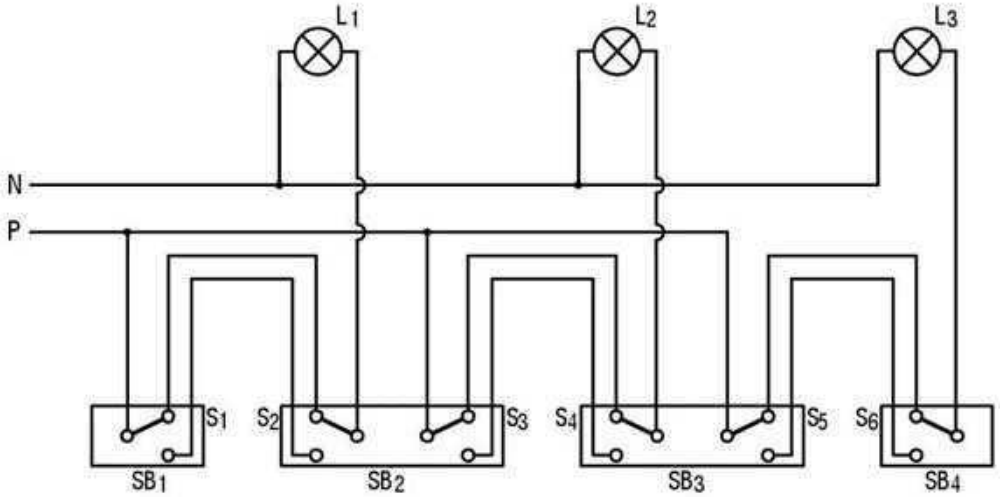

N - Neutral
P - Phase
SB - Switch Board
S - Switch
L - Light Bulb

Fig.5. Staircase wiring electric circuit

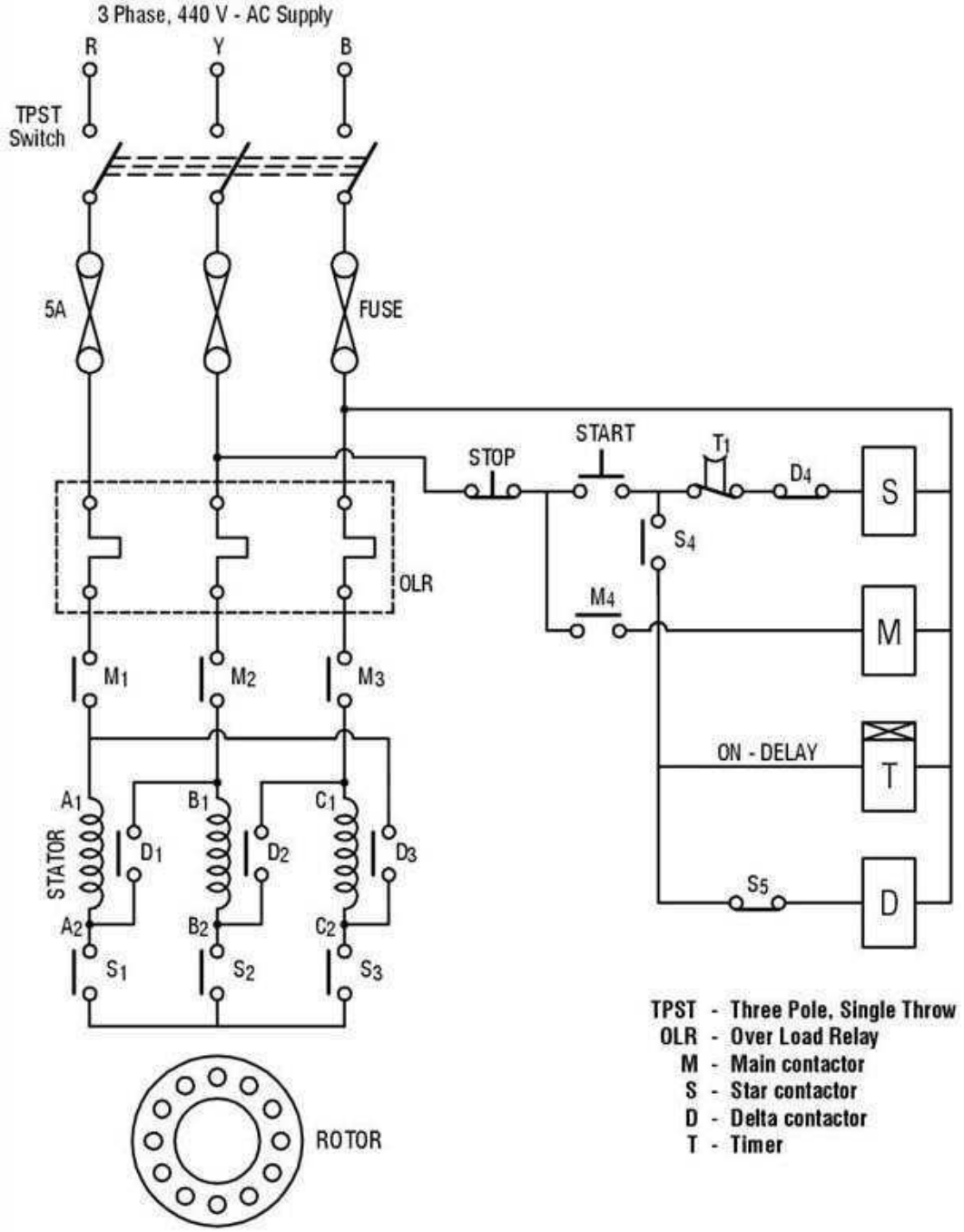

Fig.6. Control and main circuit for automatic star delta starter

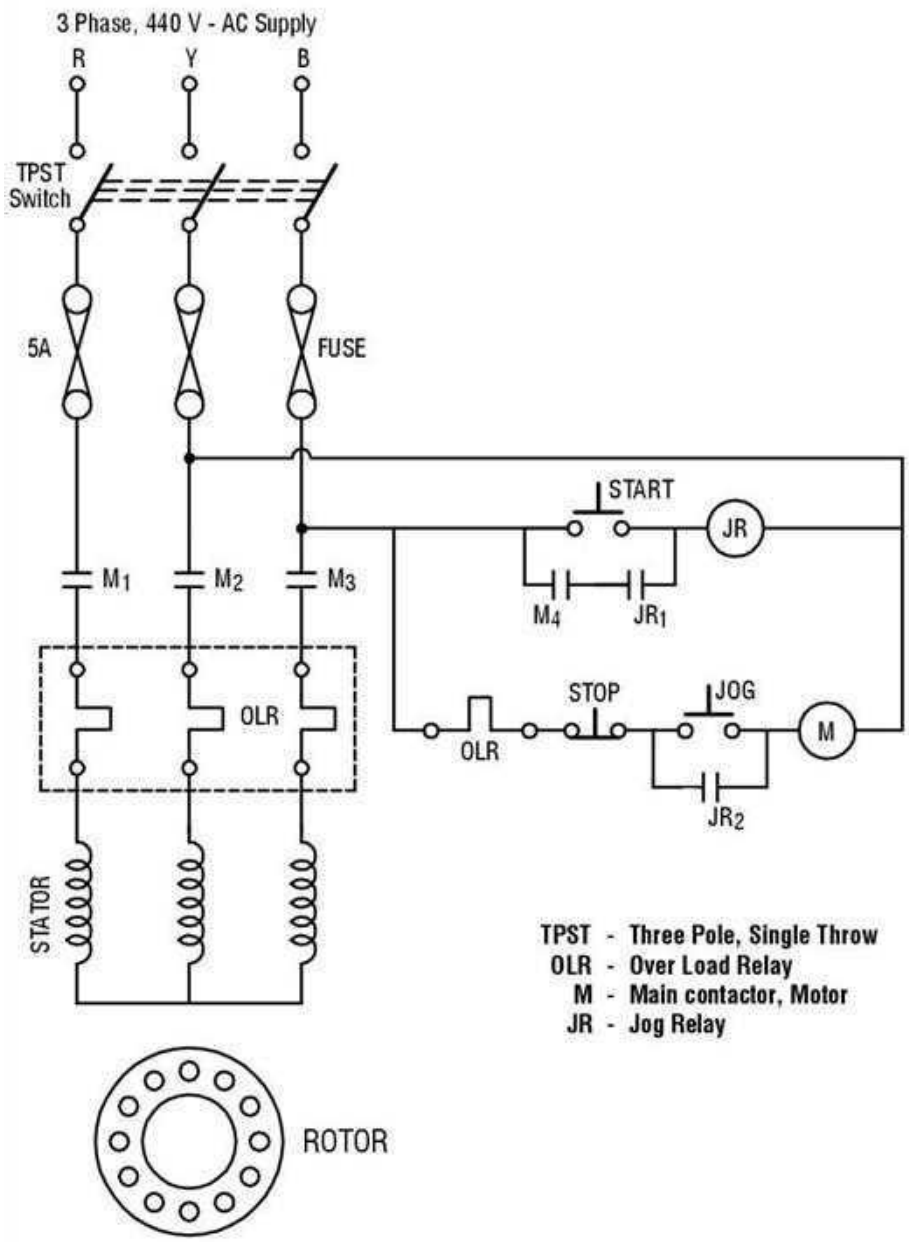

Fig.7. Control circuit for jogging in cage induction motor

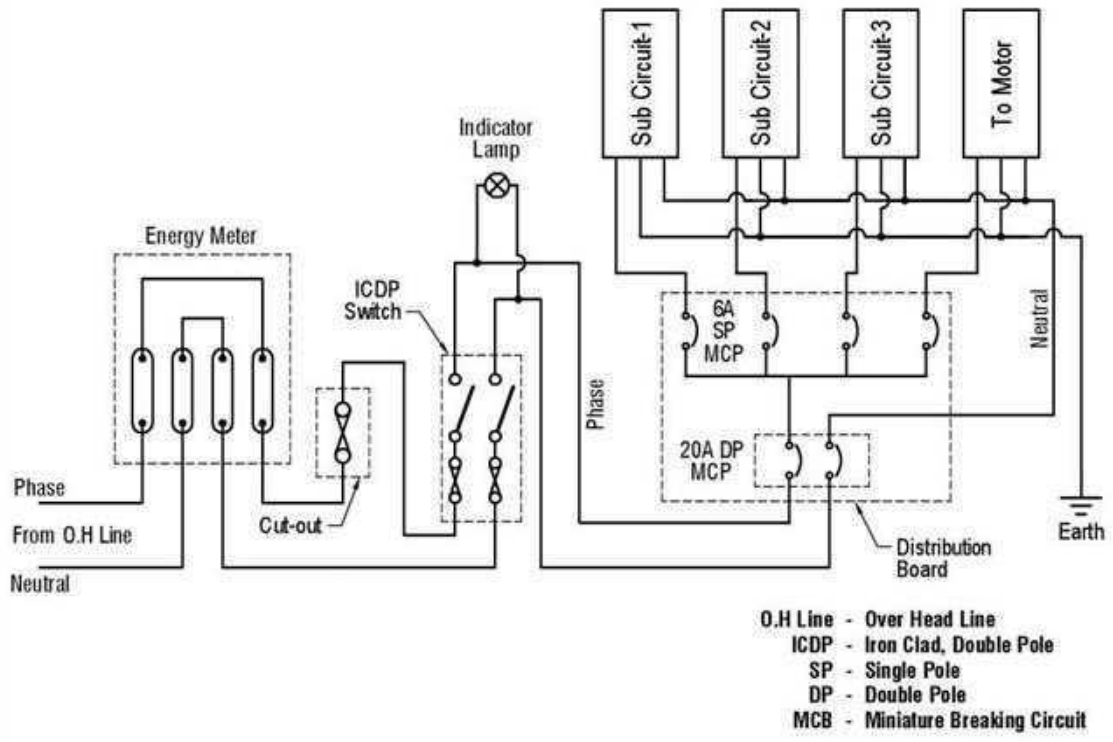

Fig.8. Single phase wiring circuit

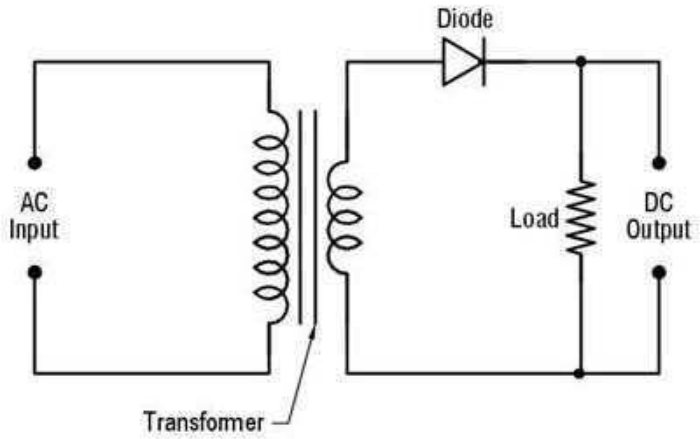

Fig.5. Half wave rectifier circuit

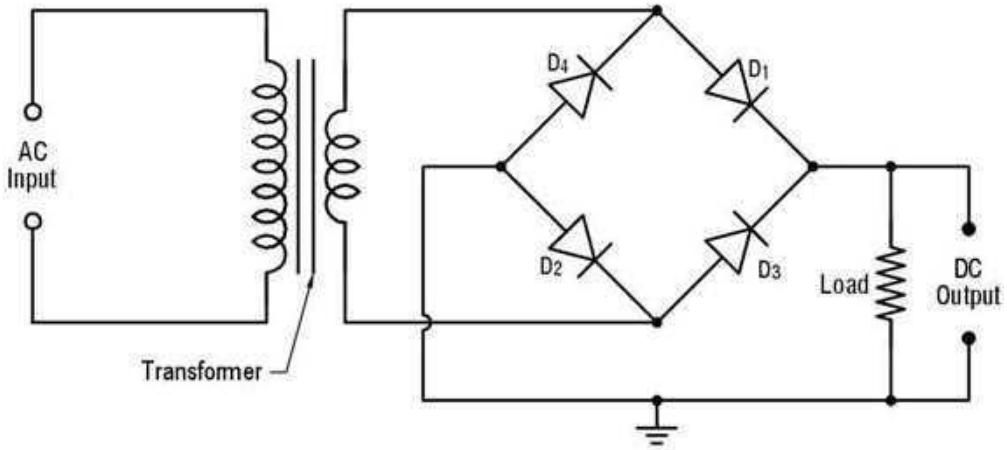

Fig.6. Bridge rectifier circuit

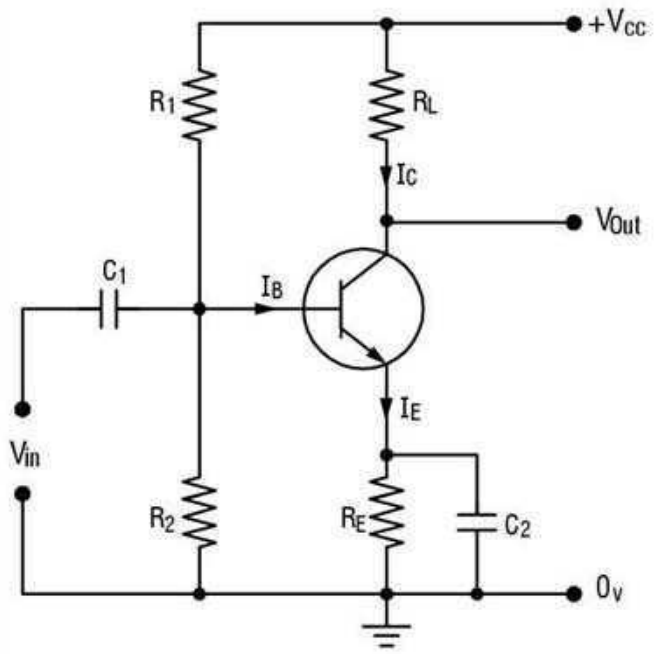

Fig.7. Common emitter amplifier circuit

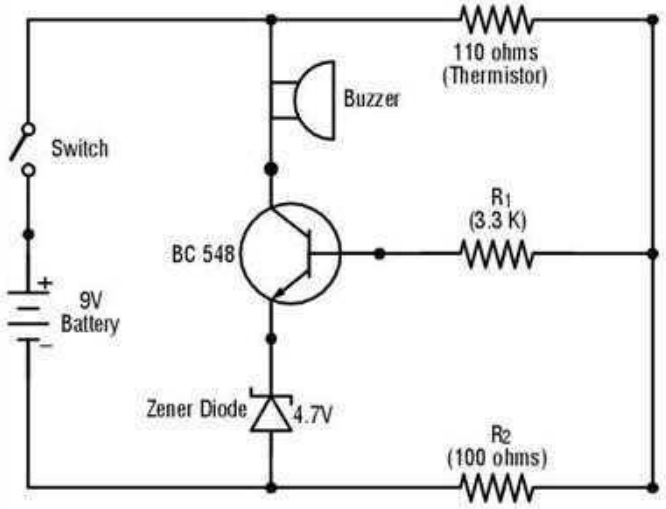

Fig.8. Fire alarm circuit

EP232460	BASIC ENGINEERING PRACTICES	L	T	P	C
Practical		1	0	2	2

Introduction

It has been realized that Tamil Nadu would become a prosperous and a modern state by rising skill levels. It is very much important for fresh technicians to be highly skilled in dealing with the modern technologies in the Mechanical, Electrical, Plumbing and Safety & Security system works of building since the building systems have become more integrated. Besides, having the onsite experience is valid to build up quality craftsmanship.

By understanding the huge demand of the skilled technicians in the basic engineering practices. This course equips participants with the knowledge and skills needed to install water supply and drainage systems, guarantee water quality, Low Voltage power supply installation, and safety & security systems.

Course Objectives

The objective of this course is to prepare the student,

- To understand the work area and piping materials and tools for plumbing.
- To install the water supply system, drainage system, pipes, sanitary fixtures and pipe fittings.
- To install a water pump and to operate and maintain a water purifier unit.
- To perform the basic distribution of electrical supply and installation of electrical fixtures for domestic applications.
- To study and connect the basic security and safety systems.
- To learn about the fire fighting extinguisher and fire fighting systems.

Course Outcomes

On successful completion of this course, the student will be able to,

CO1: Execute the installation of assembled pipes, fittings, and other components for water supply and drainage systems.

CO2: Establish the installation of pipes, fittings, and other components for drainage systems.

CO3: Learn and Install the water pump and water purifier.

CO4: Affix electrical fixtures and implement Lightning Arrester and Earthing Systems for Low Voltage System.

CO5: Install the safety and security system.

Pre-requisites

NIL

CO/PO Mapping

CO / PO	PO1	PO2	PO3	PO4	PO5	PO6	PO7
CO1	3	3	2	1	1	1	2
CO2	3	3	2	1	1	1	2
CO3	3	3	2	1	1	1	2
CO4	3	3	2	1	1	1	2
CO5	3	3	2	1	1	1	2

Legend: 3-High Correlation, 2-Medium Correlation, 1-Low Correlation

Instructional Strategy

- It is advised that teachers take steps to pique pupils' attention and boost their curiosity to learn.

- Implement task-based learning activities where students work on specific tasks or projects.
- Incorporate technology tools and resources, such as online platforms, interactive multimedia, and virtual communication tools, to enhance engagement and provide additional practice opportunities.
- Incorporate formative and summative assessments to gauge student progress and provide targeted feedback.
- Throughout the course, a theory-demonstrate-practice-activity strategy may be used to ensure that learning is outcome and employability based.
- All demonstrations/Hand-on practices may be followed in the real environment as far as possible.

Assessment Methodology

	Continuous Assessment (40 marks)				End Semester Examination (60 marks)
	CA1	CA2	CA3	CA4	
Mode	Practical (Exercises 1,2,5 and 6)	Practical (Exercises 3,4,7 and 8)	Model Practical (All Exercises)	Record of work done (8 Exercises + 2 Reports)	Practical Examination
Duration	2	2	3	-	3
Exam Marks	80	80	100	100	100
Converted to	15	15	15	10	60
Marks	15		15	10	60

Note:

CA1 and CA2: It should be conducted as per the end semester question pattern for 80 Marks (without written test). The 80 marks will be converted to 15 Marks. The best one will be considered for the Internal Assessment of 15 Marks.

CA 3: After completion of all the exercises, model examination should be conducted as per end semester question pattern. The mark should be converted to 15 Marks for the internal assessment.

CA 4: Record of work done should be maintained and the same have to be evaluated after completion of each practical exercise before the commencement of the next exercise for 10 Marks. Two activity reports should be completed and the same should be evaluated for 10 marks each. The average of 8 practical exercises and 2 reports marks should be converted to 10 Marks for the internal assessment.

EP232460	BASIC ENGINEERING PRACTICES	L	T	P	C
Practical		**1**	**0**	**2**	**2**

Plumbing - Sanitary Work - Safety during work - Types of plumbing pipes - Plumbing tools - Cutting Tools - Plumbing Symbols - Pipe Fittings - Types of pipe joints - Pipe bending tools - Pipe Cutting - Threading a Pipe - Methods of Testing Pipelines - Smoke Test - Pressure Hydraulic Test - Plumbing and Sanitary Fixtures - Tap or Faucet - Shower - Water Closets - Flushing Cistern - Geyser - Valves. Types of Pumps - Deep Well Pump - Centrifugal Pump - Reciprocating Pump - Jet Well Pump - Rotary Pump - Water Meter. Causes of Damage to the Pipeline and Plumbing System - Steps for Repair - defects commonly encountered in the functioning of taps and faucets, its causes and remedial measures - The defects commonly encountered during the functioning of stopcock, its causes and remedial measures - The commonly encountered defects during the operation of gate valves, their causes and remedial measures. Types of water purifiers - Reverse Osmosis (RO) water purifiers - Ultra Filter water purifiers - Ultraviolet (UV) Water Purifiers - Gravity Based water purifiers - Activated Carbon water purifiers - Guidelines for Installation of Water Purifier - Identify the Fault - Common problems and their solutions.		5
Exercise 1	Install the water supply system as shown in the layout(shower with hot and cold water supply) and prepare the bill of material with specifications.	3
Exercise 2	Install the drainage system as shown in the layout and prepare the bill of material with specifications.	3
Exercise 3	Install the given pump for the water supply to storage. Prepare the list of components with specifications.	3
Exercise 4	Install the Water Purifier and mount the filter. Demonstrate how to replace the damaged components, membrane, filter, valve and water tank.	3

Basic Concept of Electricity - Types of electricity - Voltage - Current - Classification of current - Resistance - Electric power - Power factor - Basic Electric Circuit - Series Circuit - Parallel Circuit - Ohm's Law - Kirchhoff's Law - Power - Energy - Tools and Equipment - Importance of Earthing System - Types of Earthing - Pipe Earthing - Plate Earthing - Lightning - Lightning Arrester - Wiring materials - Insulating Materials - Wiring Accessories - Miniature Circuit Breaker (MCB) - Conduit Wiring - Concealed Wiring - Colour Code - Distribution Board - Electrical Hazard - Fire Extinguisher - First Aid for Electrical Emergencies - Electrical Rescue Techniques. Different Types of CCTV Cameras - Components Needed for CCTV Camera Installation - IP Camera Installation - Security Cameras - Best Locations for Indoor and Outdoor Camera - Installing Network Video Recorders (NVR) for CCTV Systems - Configuring and Testing the CCTV Systems - Maintenance and Troubleshooting of CCTV Camera Systems - Tips for Mounting Cameras Safely. Fire Alarm System Components - Alarm Signalling Systems - Automatic Alarm-Initiating Devices - Manually Actuated Alarm-Initiating Devices - Inspection and Testing / Smoke Detector using Arduino and Smoke Sensor: Components used - Arduino UNO development board - 16×2 LCD - Smoke Sensor - Breadboard - Connecting wires. - Fire alarm - Installation procedure.		6
Exercise 5	Connect the single phase power supply for domestic applications as per the circuit diagram. List the bill of materials with specifications.	3
Exercise 6	Prepare an earth bit and erect the earth electrode / plate. Mention the importance of Earthing and Lightning arrester.	3
Exercise 7	Install a CCTV camera and configure. Mention the list of components.	3
Exercise 8	Install the Smoke Detector Alarm / Fire alarm system as per the circuit. (Electrical / IOT based)	3
	Assessment test	10
	Total Hours	**45**

Suggested list of student activity (The hours allotted for General revision and test can be used to prepare the report)

1. Study the existing water supply / drainage system / water recycling plant and prepare the report.
2. Study the existing water treatment plant and prepare the report.
3. Study the existing CCTV system and prepare the report.
4. Study the existing fire fighting system and prepare the report.

Note: Four students can be grouped as a batch to prepare and submit the activity report. Each batch should submit any two reports from the above activity. The report should have the layout of the system, bill of materials with specifications and important common troubles/errors and rectification procedure.

Reference:

- Multi Skill Technician (Electrical) QP Code: ELE/Q3115.
- Plumber Practical (I Year) - Neelkanth, English NSQF Level - 3 ITI Book.
- Plumber Theory Manish Sharma.
- Plumber Trade Practical NIMI, Chennai.
- Craftsmen Training Scheme (CTS) NSQF Level-3 Central Staff Training and Research Institute, Kolkata.
- IoT Based Smart Home Automation and Energy Management.
- Multi Skill Technician (Electrical) ELE/Q3109 v1.0.
- Jal Vitaran Sanchaalak (Water Distribution Operator) (Multi - Skill) PSC/Q0122.
- Selection, Installation and Maintenance of First-Aid Fire Extinguishers — Code of Practice (Third Revision)
- CCTV Camera Equipment Installation, Service & Maintenance.
- CCTV Camera installation Book Mr.Prabhu, Prabhu and Manikanda Prabhu
- CCTV Surveillance: A CCTV security system training book Kindle Edition by M. J. Ansari.
- Selection, Installation and Maintenance of Control and indicating equipment for fire detection and alarm system - Code of practice.

Web-based/Online Resources

Major Water Supply Schemes | TWAD (tn.gov.in)

Deposit Works | TWAD (tn.gov.in)

Rural Water Supply Schemes | TWAD (tn.gov.in)

Urban Water Supply Schemes | TWAD (tn.gov.in)

Under Ground Sewerage Schemes | TWAD (tn.gov.in)

https://youtu.be/OTI9iSGIObU

https://youtu.be/FBu_DU-hK04

https://youtu.be/xNrZ1uZS8uU

https://youtu.be/Hyjr44BcazA

https://youtu.be/JAiwJP7l3ko

https://youtu.be/kDg-0DbVsxQ

https://youtu.be/2bCLDM74F2k

https://youtu.be/obkUNBH1xnY

https://youtu.be/USajjGYjUH4

https://youtu.be/UrWgV1F7JFs

https://youtu.be/Y8duhoCdDz4

https://youtu.be/GUmI_lH9cAc

https://youtu.be/JWXh-WwqlwI

Additional Instructions

Note: For the record of work done for practical exercises, a notebook or printed manual may be used. In this, the student should draw a diagram, and mention the readings/observations, calculations and result manually. The same has to be submitted for the end-semester examination on the first attempt.

The proper safety procedure and norms should be followed with proper uniform (Khaki pants & half-hand shirt) with safety shoes during the practices.

All the exercises should be completed before the Board Practical Examinations. Students will be permitted to select any one exercise by lot or the question paper provided by the DOTE.

Allocation of Marks for End Semester Examinations.

Part	Description	Marks
A	Layout / Circuit	10
B	List of Tools / Equipments and Materials	10
C	Procedure / Observation / Installation	30
D	Finish / Completion	20
E	Written test (MCQ question) *	20
F	Viva voce	10
	Total	100

Written test (MCQ)

Twenty one mark MCQ questions shall be asked from the theory portions.

Sample diagram / Layout for Practical Exercises.

The following diagrams are suggestions for the practical exercise not limited to this. The practical exercises should have minimum practices to learn and meet the course outcome.

Exercise 1 – Water supply system

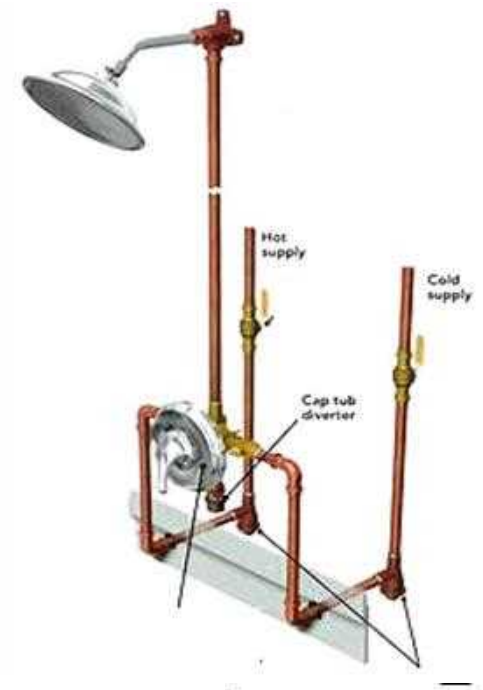

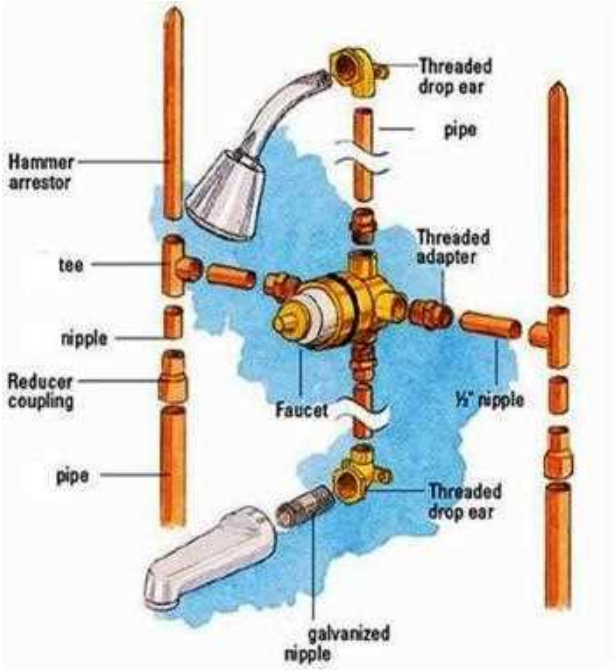

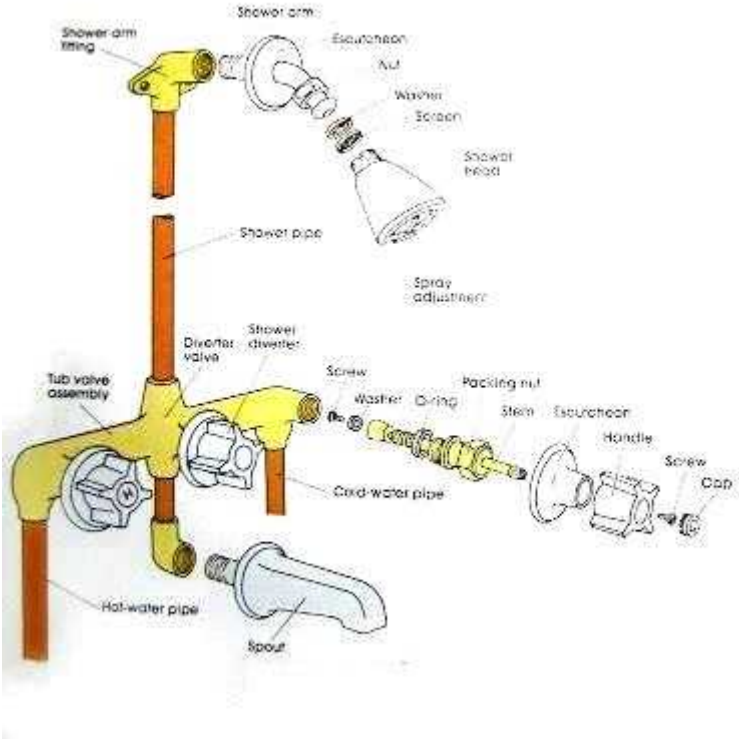

Exercise 2 – Drainage System

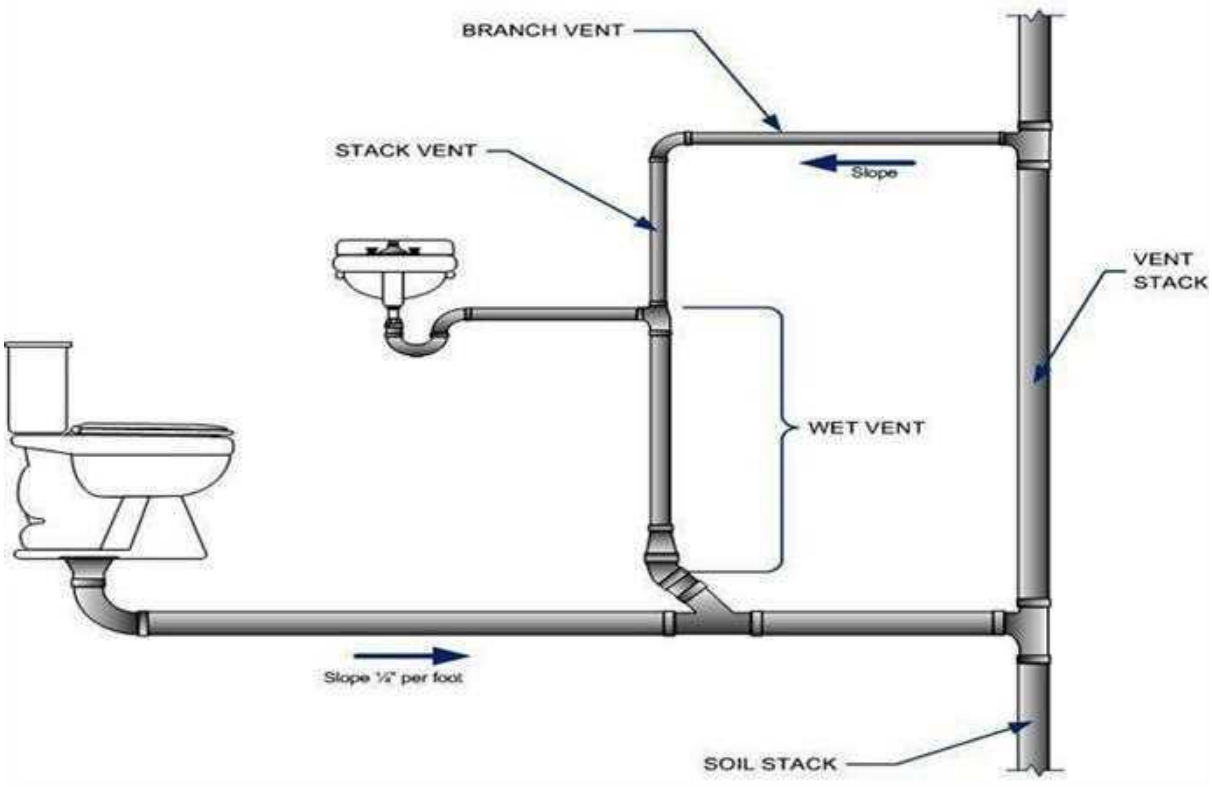

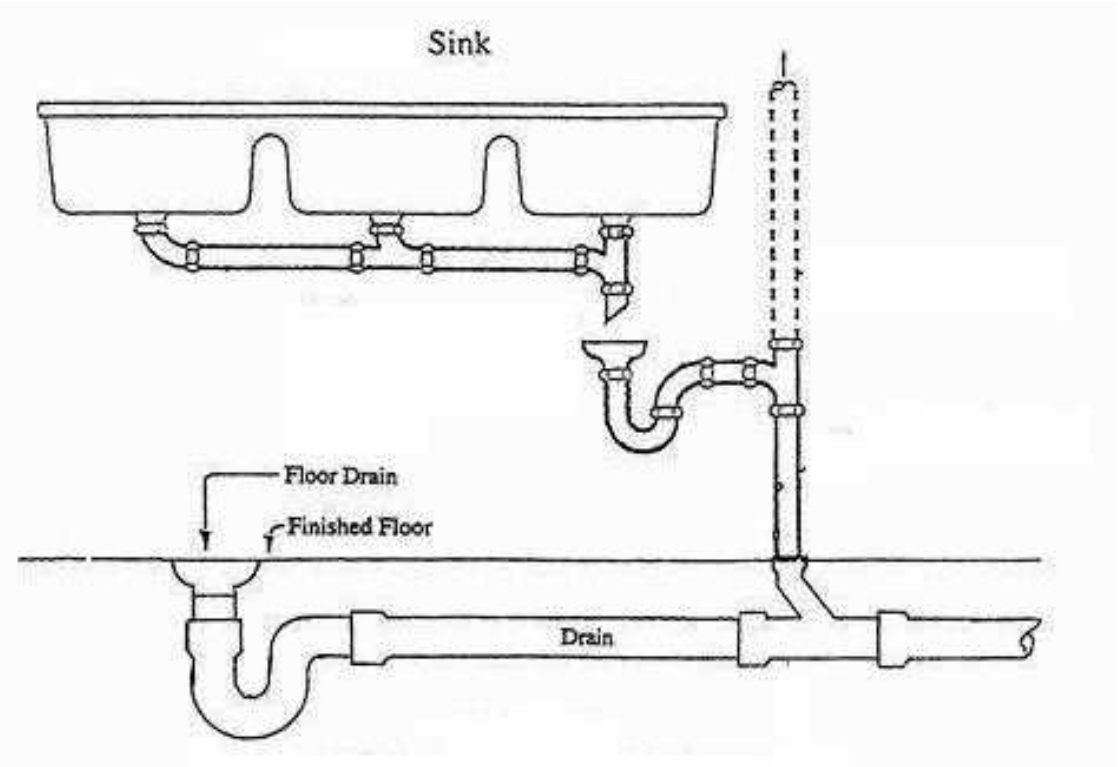

Exercise 3: Water pump Installation

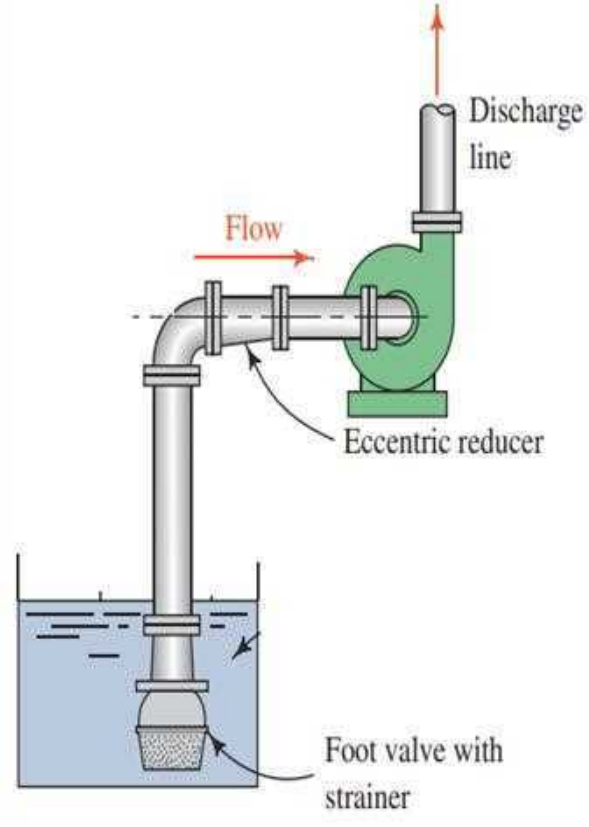

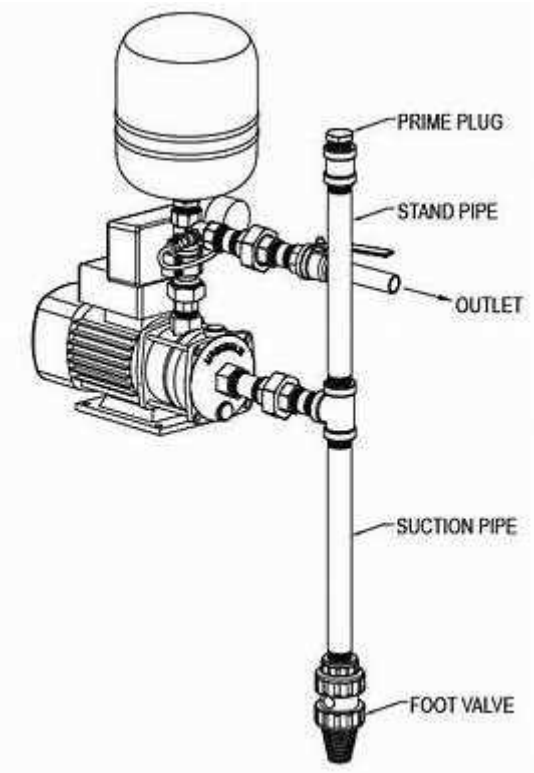

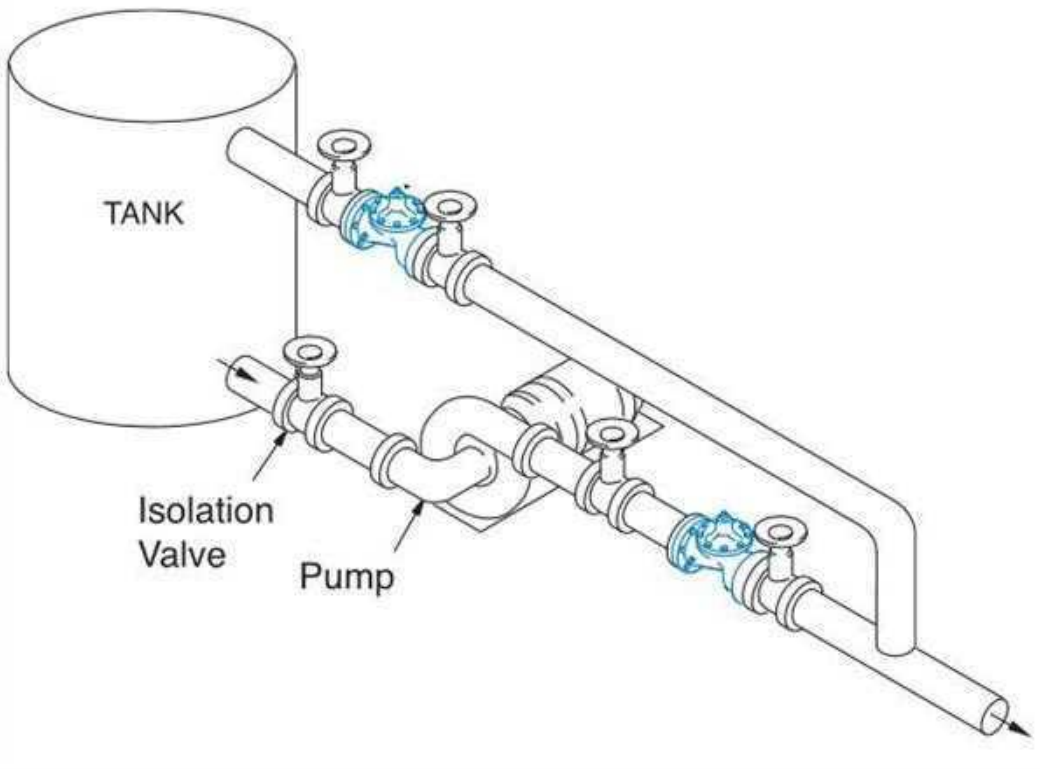

Exercise 5: Electrical Power supply for domestic applications.

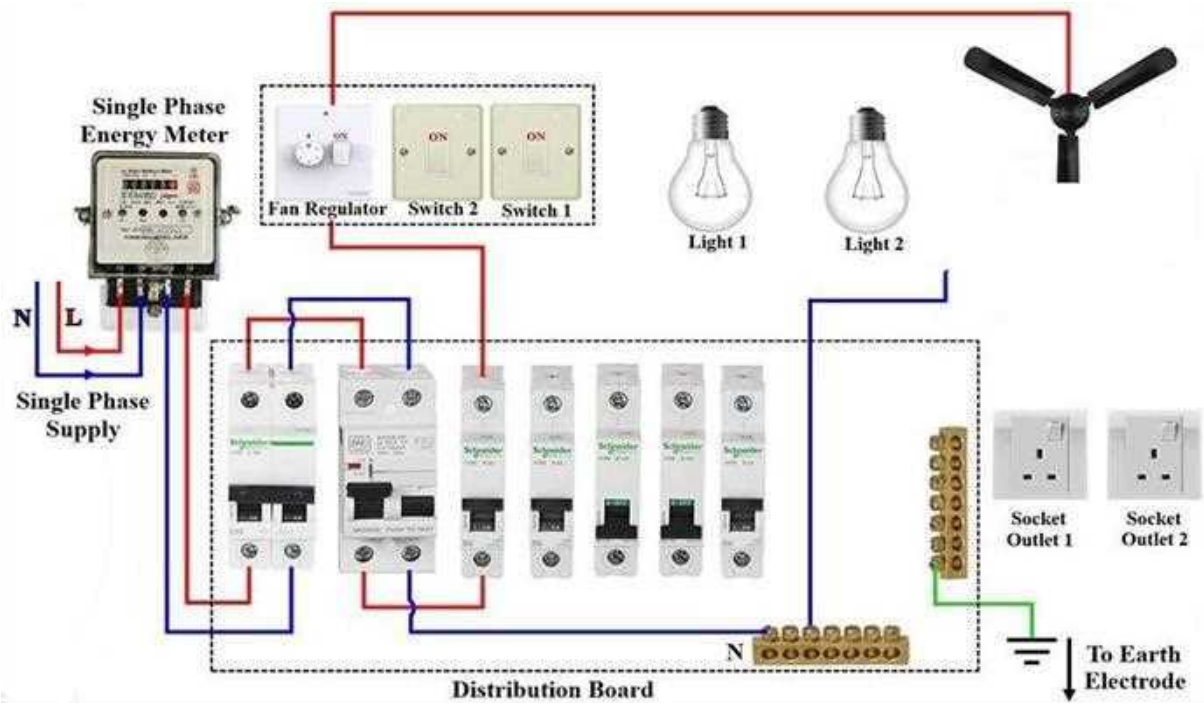
Single Phase
Energy Meter
Fan Regulator
Switch 2
Switch 1
Light 1
Light 2
N
L
Single Phase
Supply
Socket
Outlet 1
Socket
Outlet 2
N
To Earth
Electrode
Distribution Board

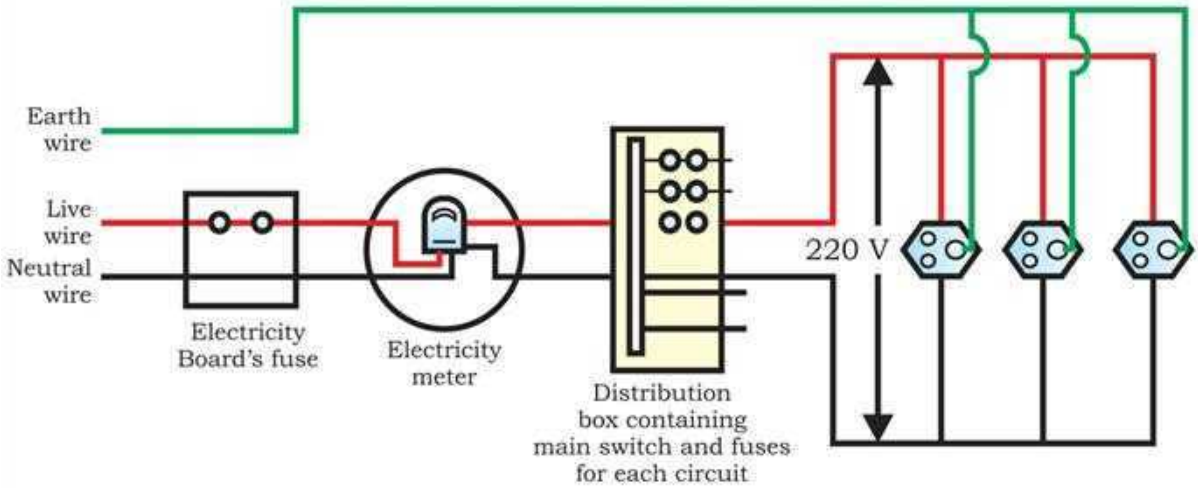
Earth
wire
Live
wire
Neutral
wire
Electricity
Board's fuse
Electricity
meter
Distribution
box containing
main switch and fuses
for each circuit
220 V